PERQ MEMORY BOARD

10/19/81

REFERENCE DESIGN	PART NUMBER	SCHEMATIC PAGE #
U1	74S374	4
U2	UPD416C2	20
U3	UPD416C2	20
U4	UPD416C2	20
U5	UPD416C2 SUB PARTS	20
U6	UPD416C2 (MK4116-3) (F16K4DC)	20
U7	UPD416C2	20
U8	UPD416C2	20
U9	MPD416C2	20
U10	748241	4
U11	74S374	4
U12	UPU416C2	20
U13	UPU416C2	20
U14	UPU416C2	20
U15	UPU416C2 SUB PARTS	20
U16	UPU416C2 (MK4116-3) (F16K4DC)	20
U17	UPU416C2	20
U18	UPU416C2	20
U19	UPD416C2	20
U20	74LS166 (16 PIN SOCKET)	10
U21	74S374	8
U22	74S241	4
U23	UPD416C2	20
U24	UPD416C2	20
U25	UPD416C2	20
U26	UPD416C2 SUB PARTS	20
U27	UPD416C2 (MK4116-3) (F16K4DC)	20
U28	UPD416C2	20
U29	UPD416C2	20
U30	UPD416C2	20
U31	748374	5
U32	UPD416C2	20
U33	UPD416C2	20
U34	UPD416C2	20
U35	UPD416C2 SUB PARTS	20
U36	UPD416C2 (MK4116-3) (F16K4DC)	20
U37	UPD416C2	20
U38	UPD416C2	20
U39	UPD416C2	20
U40	74L8166 (16 PIN SOCKET)	10

Three Rivers Computer
PARTS LIST
PERQ MEM-D
T.T.
1 of 11

PERQ MEMORY BOARD

10/19/81

REFERENCE DESIGN	PART NUMBER		SCHEMATIC PAGE #
U41	74S374		8
U42	UPD416C2		20
U43	UPD416C2		20
U44	UPD416C2		20
U45	UPD416C2	SUB PARTS	20
U46	UPD416C2	(MK4116-3) (F16K4DC)	20
U47	UPD416C2		20
U48	UPD416C2		20
U49	UPD416C2		20
U50	74S374		7
U51	74S374		5
U52	UPD416C2		20
U53	UPD416C2		20
U54	UPD416C2		20
U55	UPD416C2	SUB PARTS	20
U56	UPD416C2	(MK4116-3) (F16K4DC)	20
U57	UPD416C2		20
U58	UPD416C2		20
U59	UPD416C2		20
U60	74LS166	(16 PIN SOCKET)	9
U61	SPARE		
U62	UPD416C2		20
U63	UPD416C2		20
U64	UPD416C2		20
U65	UPD416C2	SUB PARTS	20
U66	UPD416C2	(MK4116-3) (F16K4DC)	20
U67	UPD416C2		20
U68	UPD416C2		20
U69	UPD416C2		20
U70	74S374		7
U71	74S374		14
U72	UPD416C2		20
U73	UPD416C2		20
U74	UPD416C2		20
U75	UPD416C2	SUB PARTS	20
U76	UPD416C2	(MK4116-3) (F16K4DC)	20
U77	UPD416C2		20
U78	UPD416C2		20
U79	UPD416C2		20
U80	76LS166	(16 PIN SOCKET)	9

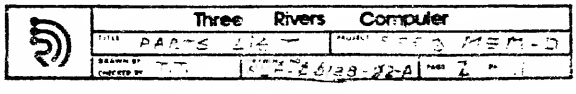

PERQ MEMORY BOARD

10/19/81

REFERENCE DESIGN	PART NUMBER		SCHEMATIC PAGE #
U81	74S280		6
U82	74S374		4
U83	UPD416C2		20
U84	UPD416C2		20
U85	UPD416C2		20
U86	UPD416C2	SUB PARTS	20
U87	UPD416C2	(MK4116-3) (F16K4DC)	20
U88	UPD416C2		20
U89	UPD416C2		20
U90	UPD416C2		20
U91	74LS166	(16 PIN SOCKET)	10
U92	74S374		8
U93	74S374		14
U94	74S374		4
U95	UPD416C2		20
U96	UPD416C2		20
U97	UPD416C2		20
U98	UPD416C2		20
U99	UPD416C2		20
U100	UPD416C2		20
U101	UPD416C2	SUB PARTS	20
U102	UPD416C2	(MK4116-3) (F16K4DC)	20
U103	UPD416C2		20
U104	UPD416C2		20
U105	UPD416C2		20
U106	UPD416C2		20
U107	UPD416C2		20
U108	UPD416C2		20
U109	UPD416C2		20
U110	UPD416C2		20
U111	74LS166	(16 PIN SOCKET)	10
U112	74S374		8
U113	74S374		5
U114	UPD416C2		20
U115	UPD416C2		20
U116	UPD416C2	SUB PARTS	20
U117	UPD416C2	(MK4116-3)	20
U118	UPD416C2	(F16K4DC)	20
U119	UPD416C2		20

Three Rivers Computer
PARTS LIST
PERQ-MEM-D
T.T.
3 of 11

PERQ MEMORY BOARD

10/19/81

REFERENCE DESIGN	PART NUMBER	SCHEMATIC PAGE #
U120	UPD416C2	20
U121	UPD416C2 (MK4116-3) (F16K4DC)	20
U122	74S374	7
U123	UPD416C2	20
U124	UPD416C2	20
U125	UPD416C2	20
U126	UPD416C2 SUB PARTS	20
U127	UPD416C2 (MK4116-3)	20
U128	UPD416C2 (F16K4DC)	20
U129	UPD416C2	20
U130	UPD416C2	20
U131	74LS166 (16 PIN SOCKET)	9
U132	74S374	7
U133	74S74	14
U134	74S374	5
U135	UPD416C2	20
U136	UPD416C2	20
U137	UPD416C2	20
U138	UPD416C2 SUB PARTS	20
U139	UPD416C2 (MK4116-3)	20
U140	UPD416C2 (F16K4DC)	20
U141	UPD416C2	20
U142	UPD416C2	20
U143	SPARE	
U144	74S51	3.6
U145	UPD416C2	20
U146	UPD416C2	20
U147	UPD416C2	20
U148	UPD416C2 SUB PARTS	20
U149	UPD416C2 (MK4116-3)	20
U150	UPD416C2 (F16K4DC)	20
U151	UPD416C2	20
U152	UPD416C2	20
U153	74LS166 (16 PIN SOCKET)	9
U154	74S280	6
U155	UPD416C2	20
U156	UPD416C2 SUB PARTS	20
U157	UPD416C2 (MK4116-3)	20
U158	UPD416C2 (F16K4DC)	20
U159	UPD416C2	20
U160	UPD416C2	20

PERQ MEMORY BOARD

10/19/81

REFERENCE DESIGN	PART NUMBER			SCHEMATIC PAGE #
U161	UPD416C2	(MK4116-3)	(F16K4DC)	20
U162	UPD416C2	(MK4116-3)	(F16K4DC)	20
U163	74S175			6
U164	74S153			6
U165	74S279			14
U166	74S74			3
U167	UPD416C2			20
U168	UPD416C2			20
U169	UPD416C2	SUB PARTS		20
U170	UPD416C2	(MK4116-3)		20
U171	UPD416C2	(F16K4DC)		20
U172	UPD416C2			20
U173	UPD416C2			20
U174	UPD416C2			20
U175	74S139			6,26
U176	74S74			3
U177	74S08			3
U178	SPARE			
U179	74SD4			16
U180	74SD4			16
U181	74SD4			16
U182	74SD4			16
U183	74SD4			17
U184	74SD4			17
U185	74SD4			17
U186	74SD4			17
U187	74SD4			18
U188	74SD4			18
U189	74SD4			18
U190	74SD4			18
U191	74SD4			19
U192	74SD4			19
U193	74SD4			19
U194	74S04			19
U195	74S258			15
U196	74S258			15
U197	74S258			14
U198	74S258			14
U199	74S258			14

PERQ MEMORY BOARD

10/19/81

REFERENCE DESIGN	PART NUMBER	SCHEMATIC PAGE #
U201	74S112	24
U202	74S112	24
U203	74S112	25
U204	74S00	4,5
U205	74LS374	27
U206	74S37	25
U207	74S00	14, 22, 26, 27
U208	74LS163	22
U209	74LS374	22
U210	74S02	6, 14, 15, 23
U211	74LS374	15
U212	74LS197	14
U213	74LS374	23
U214	74S112	24
U215	74S112	24, 25
U216	74S112	25
U217	74S03	25, 27
U218	AM27S29 (HM1-7649-6) (74S472) (TBP1BS42) (20 PIN SOCKET)	27
U219	74S175	27
U220	74S32	22, 23, 24
U221	74LS374	22
U222	74LS174	22
U223	74S197	22
U224	74LS393	15
U225	74LS197	14
U226	74LS374	23
U227	74S112	24
U228	74S30	24
U229	74S32	25, 27
U230	AM27S29 (HM1-76A9-6) (74S472) (TBP18S42) (20 PIN SOCKET)	27
U231	74S10	23, 25
U232	74S74	22, 23
U233	74LS163	22
U234	74LS240	23
U235	74S197	22
U236	74LS393	14
U237	74S138	23
U238	74S112	24
U239	74S11	24, 25
U240	74S112	25

PERQ MEMORY BOARD

10/19/81

REFERENCE DESIGN	PART NUMBER	SCHEMATIC PAGE #
U241	XTAL K1100A (14 PIN SOCKET)	24
U242		
U243	74S04	25, 26
U244	74LS163	26
U245	AM27S29 (HMI-7649-6) (74S472) (TBP18542) (20 PIN SOCKET)	26
U246	74S374	26
U247	74S225	13
U248	74S225	13
U249	74S374	13
U250	74S112	12
U251	74S00	12, 23, 25
U252	74S112	12
U253	74S20	12
U254	74S112	26
U255	74S162	26
U256	AM27S29 (HM1-76496) (74S472) (TBP18S42) (20 AN SOCKET)	26
U257	74S374	26
U258	74S374	11
U259	74S32	13, 25
U260	SPARE	
U261	7643-5 (18 PIN SOCKET)	11
U262	7643-5 (18 PIN SOCKET)	11
U263	7643-5 (18 PIN SOCKET)	11
U264	74S374	11
U265	74S225	11
U266	74S225	11
U267	74S32	11, 12
U268	74S195	12
U269	74S195	12
U270	74S37	12, 25
U271	SPARE	
U272	74S74	26
U273	74S08	26
U274	74S74	26
U275	74S280	3
U276	74S280	3

7/17/80 PRQ-PCB-MEM-D RESISTORS

REGISTOR	VALUE		PAGE
R1	RC07GF102J	1K	3
R2	RC07GF271J	270Ω	20
R3	RC07GF102J	1K	3
R4	RC07GF470J	47Ω	9
R5	RC07GF102J	1K	6
R6	RC07GF102J	1K	14
R7	785-3-R33 (33Ω)	(4310R-102-330) (33Ω)	16
R8	785-3-R33 (33Ω)	(4310R-102-330) (33Ω)	16
R9	785-3-R33 (33Ω)	(4310R-102-330) (33Ω)	16
R10	785-3-R33 (33Ω)	(4310R-102-330) (33Ω)	16
R11	785-3-R33 (33Ω)	(4310R-102-330) (33Ω)	17
R12	785-3-R33 (33Ω)	(4310R-102-330) (33Ω)	17
R13	NOTE: ANOTHER SUITABLE SUBSTITUTE IS 785-3-R22 (22)		17
R14			17
R15	785-3-R33 (33Ω)	(4310R-102-330) (33Ω)	18
R16	785-3-R33 (33Ω)	(4310R-102-330) (33Ω)	18
R17	785-3-R33 (33Ω)	(4310R-102-330) (33Ω)	18
R18	785-3-R33 (33Ω)	(4310R-102-330) (33Ω)	18
R19	785-3-R33 (33Ω)	(4310R-102-330) (33Ω)	19
R20	785-3-R33 (33Ω)	(4310R-102-330) (33Ω)	19
R21	785-3-R33 (33Ω)	(4310R-102-330) (33Ω)	19
R22	785-3-R33 (33Ω)	(4310R-102-330)	19
R23	RC07GF102J	1k	25
R24	JA41J1	THERMISTOR	28
R25	RC07GF102J	1K	14
R26	RC07GF102J	1K	22
R27	RC07GF102J	1k	22
R28	RC07GF102J	1k	23
R29	RC07GF102J	1k	26
R30	RC07GF102J	1k	12
R31	RC07GF330J	33Ω	26
R32	RC07GF102J	1k	12
R33	RC07GF330J	33Ω	26
R34			
R35	RC07GF102J	1k	26
R36	RC07GF102J	1k	27
R37	RC07GF102J	1k	24
R38	RC07GF330J	33Ω	24
R39	RC07GF100J	10Ω	24
R40	CB4G75	47Ω	24

Three Rivers Computer
PARTS LIST
T.T.

PERQ MEMORY BOARD

10/19/81

REFERENCE DESIGN	PART NUMBER	SCHEMATIC PAGE #
D2	IN4004	24
D3	IN4004	24
L1	WEE-1.0 uH (1uH)	24
L2	WEE-1.0 uH (1uH)	24
L3	6317-4 (coil) (0.08uH)	24
Q1	2N3866	24
Q2	Lm320LZ-5.0	20
QTY	SOCKETS	
1	514AG37D or 814AG11D	U241
8	516AG37D or 816AG11D	U20,U40, U80, U91, U111, U31, U153
3	518AG37D 04 818AG11D	U261,U262, U263
4	520AG37D or 820AG11D	U218, U230, U245, U256
C1	202A200225 MI	
C2	202A200225 MI	
THRU		
C53	202A200225 MI	
C54	CY15C103 M	
THRU		
C70	CY15C103 M	
C71	202A200225 MI	
C72	202A200225 MI	
C73	CY15C103 M	
THRU		
C89	CY15C103 M	
C90	202A200225 MI	
C91	202A200225 MI	
C92	CY15C103 M	
THRU		
C99	CY15C103 M	
C100	202A200225 MI	
C101	CY15C103 M	
THRU		
C108	CY15C103 M	
C109	202A200225 MI	
C110	202A200225 MI	

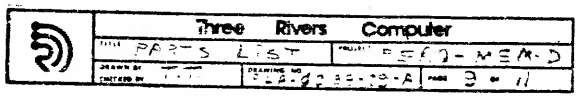

PERQ MEMORY BOARD

10/19/81

REFERENCE DESIGN	PART NUMBER	SCHEMATIC PAGE #
C111	CY15C103 M	
THRU		
C118	CY15C103 M	
C119	202A2200225 MI	
C120	CY15C013 M	
THRU		
C127	CY15C103 M	
C128	202A200225 MI	
C129	202A200225 MI	
C130	CY15C103 M	
THRU		
C137	CY15C103 M	
C138	202A200225 MI	
C139	CY15C103 M	
THRU		
C146	CY15C103 M	
C147	202A200225 MI	
C148	202A200225 MI	
C149	CY15C103 M	
THRU		
C165	CY15C103 M	
C166	202A200225 MI	
C167	202A200225 MI	
C168	CY15C103 M	
THRU		
C184	CY15C103 M	
C185	202A200225 MI	
THRU		
C236	202A200225 MI	
C237	CY15C103 M	
THRU		
C242	CY15C103 M	
C243	202A200225 MI	
C244	CY15C103 M	
THRU		
C250	CY15C103 M	

PERQ MEMORY BOARD

10/19/81

REFERENCE DESIGN	PART NUMBER		SCHMATIC PAGE #
C251	202A200225 MI		
THRU			
C258	202A200225 MI		
C259	CY15C103 M		
C260	202A200225 MI		
C261	202A200225 MI		
C62	CY15C103 M		
THRU			
C266	CY15C103 M		
C267	202A200225 MI		
C268	CY15C103 M		
THRU			
C277	CY15C103 M		
C278	202A200225 MI		
C279	202A200225 MI		
C280	CY15C103 M		
THRU			
C294	CY15C103 M		
C295	CY15C103 M		
C296	DD101	100 pf	24
C297	DD102	.001 uf	24
C298	DD181	180 pf	24
C299	DD270	. 27 pf	12
C300	CY15C103 M		
THRU			
C308	CY15C103 M		
C309	202A200225 MI		
THRU			
C326	202A200225 MI		

MEM - D

SUBASSEMBLY DIRECTORY

Drawing Number	Description
PLA-00138-01-A	MEM - D Parts List
-02-A	"
-03-A	"
-04-A	"
-05-A	"
-06-A	"
-07-A	"
-08-A	"
-09-A	"
-10-A	"
PLA-00138-11-A	MEM - D Parts List
GUA-00138-01-A	Gate Utilization
SDA-00138-01-A	Sub Assembly Directory
SDA-00138-02-A	Sub Assembly Directory
SSA-00138-01-A	PRO-SK4-MEM-D
SSA-00138-02-A	PRO-SK1-MEM-D
SCA-00138-01-A	MEM-Block Diagram
-02-A	MEM-Block Diagram
-03-A	Data Input - Parity
-04-A	Data Input : W0, W1
-05-A	Data Input : W2, W3
-06-A	Data Output
-07-A	Data Output
-08-A	Data Output

MEM - D

SUBASSEMBLY DIRECTORY

Drawing Number	Description
SCA-00138-09-A	Memory Shifter
-10-A	Memory Shifter
-11-A	Video Output
-12-A	Video Output
-13-A	Video Output
-14-A	Address Sel
-15-A	Address Sel
-16-A	Memory Drivers 3
-17-A	Memory Drivers 2
-18-A	Memory Drivers 0
-19-A	Memory Drivers 1
-20-A	Typical Ram Chip
-21-A	Ram Array
-22-A	I/O Registers
-23-A	I/O Registers
-24-A	Clock Generator
-25-A	Clock Generator
-26-A	Horizontal State
SCA-00138-27-A	Memory State

GATE UTILIZATION

PRQ-PCB-MEM-D

LEGEND

INPUT	OUTPUT
1, 2	3, 4

74S00	U251
1, 2-3	23
4, 5-6	
10, 9-8	25
13, 12-11	12

74S04	U243
1-2	
3-4	26
5-6	26
9-8	26
11-10	25
13-12	

74S32	U259
1, 2-3	
4, 5-6	25
10, 9-8	13
13, 12-11	

74S74	U274	U272
1, 2, 3, 4-5, 6		26
13, 12, 11, 10-9, 8	26	

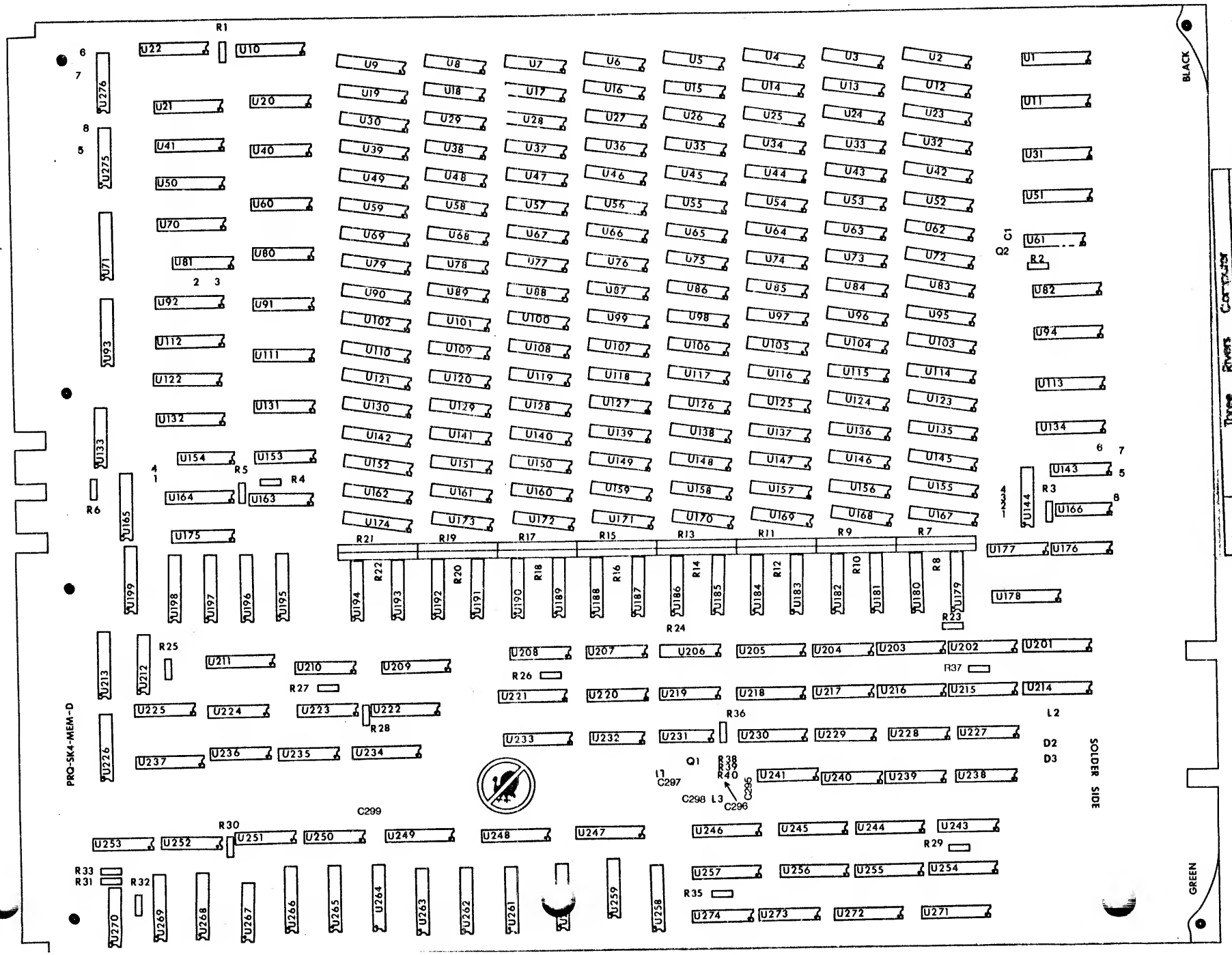
PRO-SK4-MEM-D
SOLDER SIDE
BLACK
GREEN
Three Rivers Computer
PRO-SK-0239-D
18 July, 1980

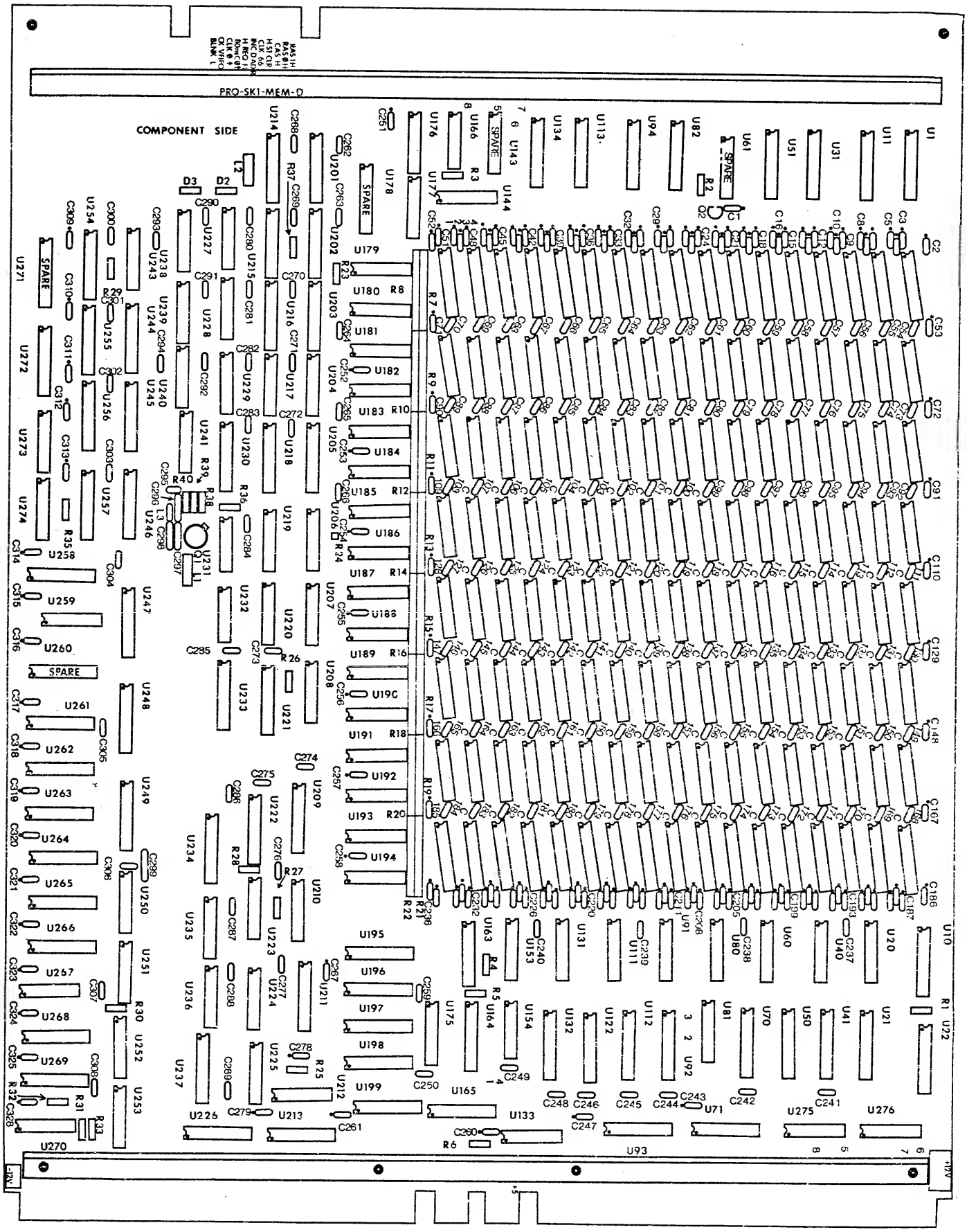

PRQ-SK-0238-D 18 July, 1980

68Ω
R34

Three Rivers Computer	
PRQ-SK1-MEM-D	MEM-D
SSA-00138-02-A	2 - 2

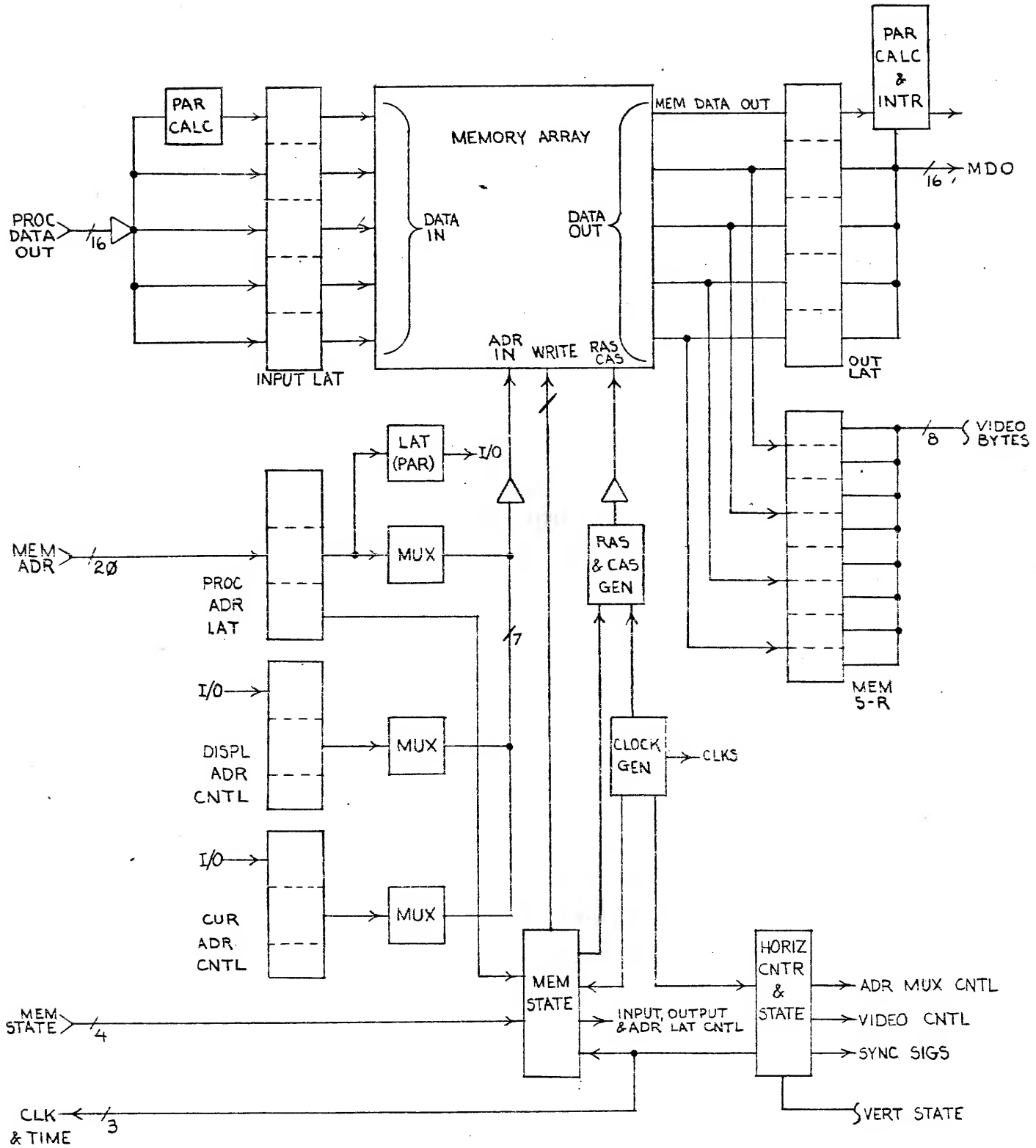

Three Rivers Computer

MEM BLOCK DIAGRAM | PERQ - MEM-D

SCA-00138-01-A | 1 of 27

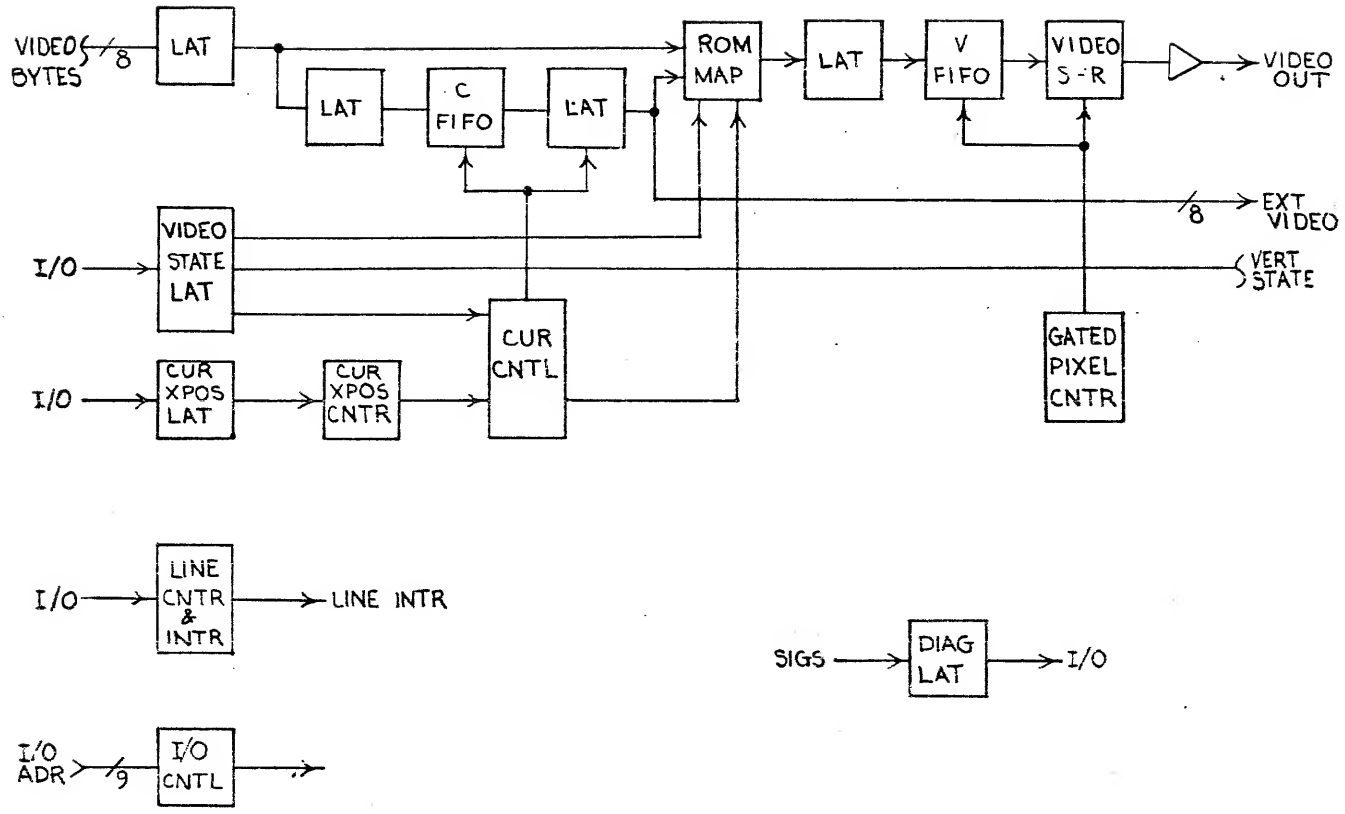

Three Rivers Computer

MEM BLOCK DIAG		PERQ - MEM - D
DRAWN BY	DRAWING NO. SCA-06138-02-A	PAGE 2 of 27

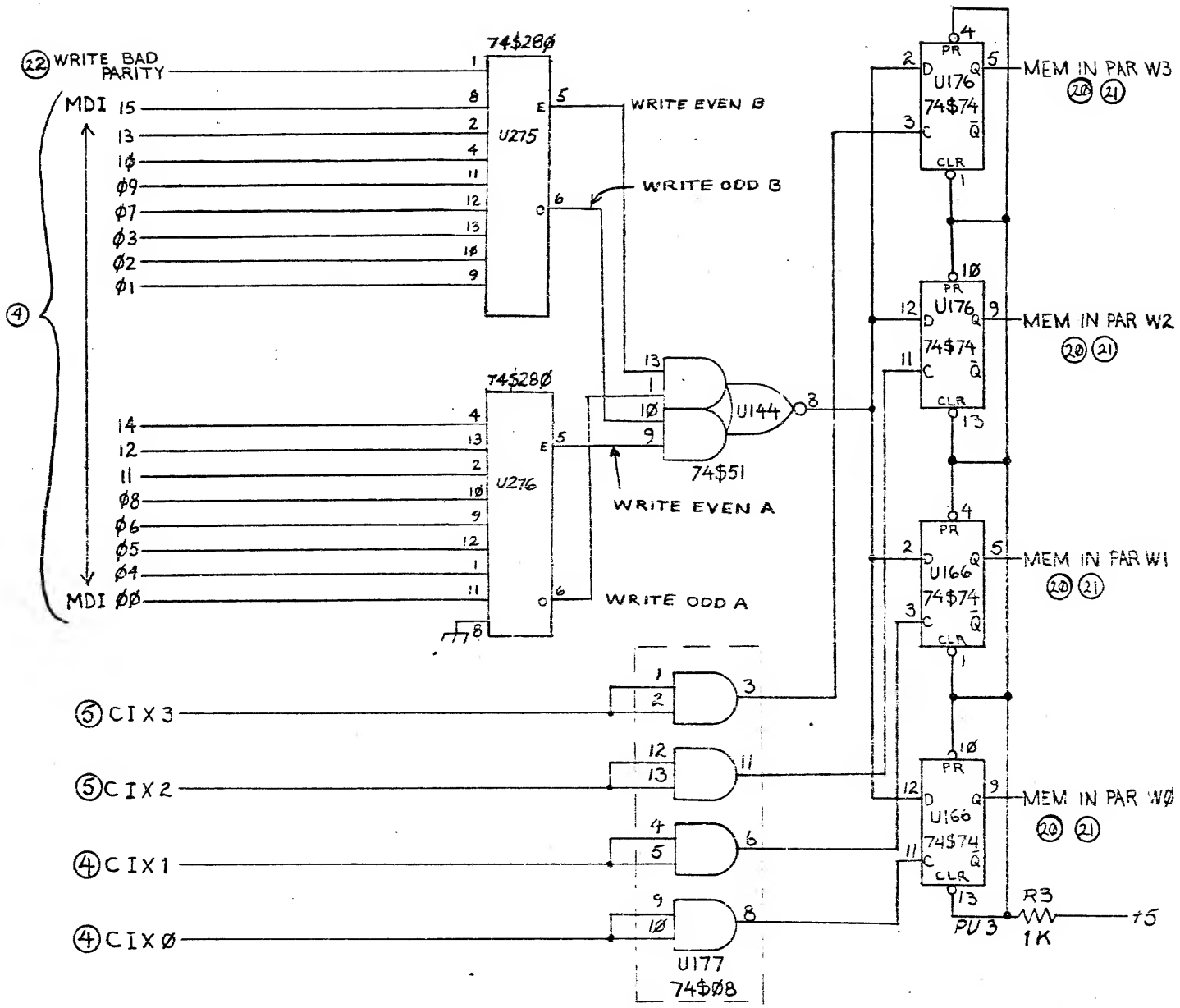

Three Rivers Computer

SCA-0039-03-A

3 of 27

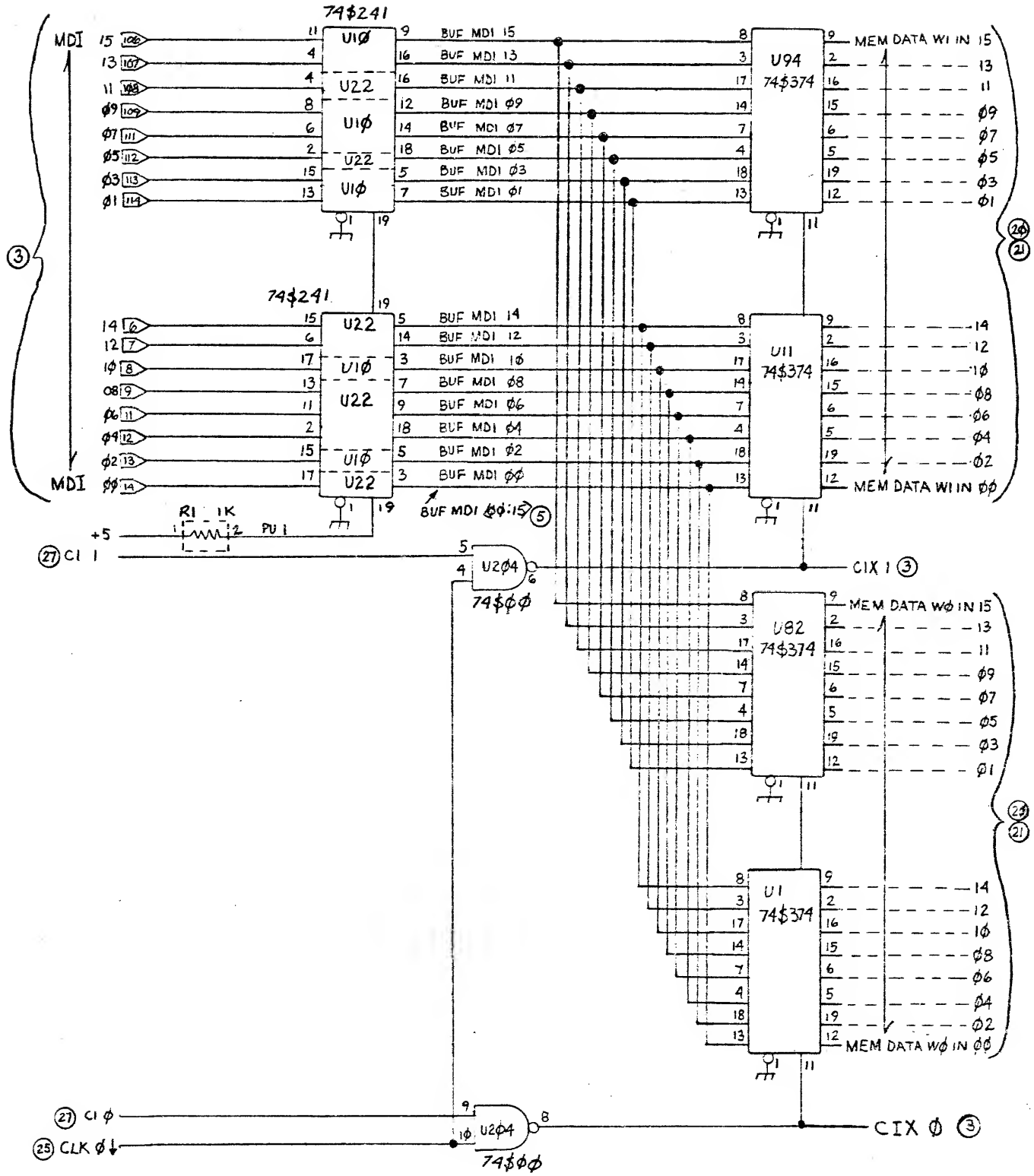

Three Rivers Computer	
TITLE DATA INPUT: WO, W1	PROJECT PRQ - MEM-
DRAWN BY DV 4/81 CHECKED BY	DRAWING NO SCA-ØØ138-Ø4-A PAGE 4 OF 27

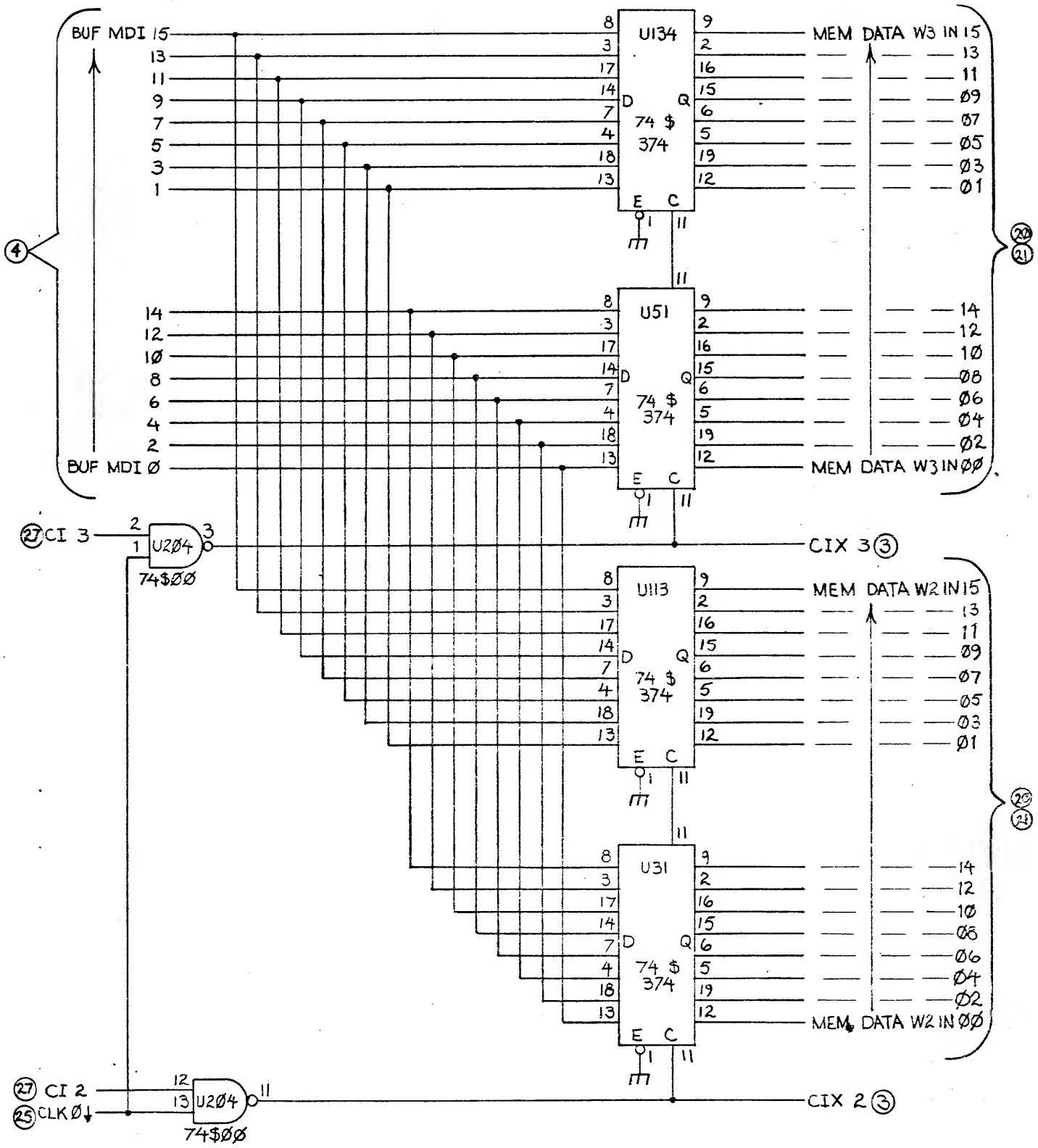

Three Rivers Computer	
DATA INPUT	PERQ - MEM
SCA-00138-05-A	5 of 27

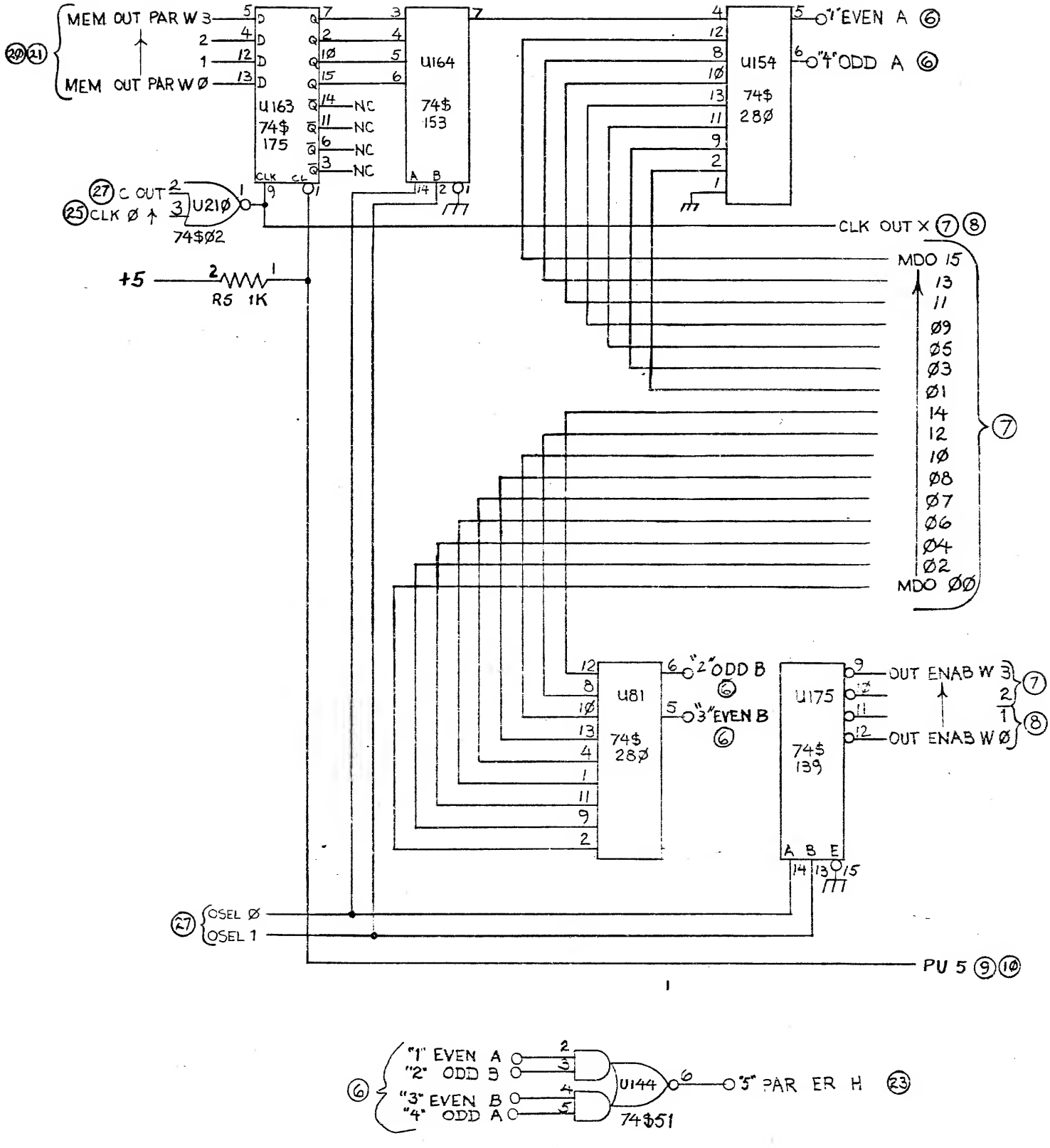

Three Rivers Computer		
TITLE DATA OUTPUT	PROJECT PERQ-MEM	
DRAWN BY / CHECKED BY	DRAWING NO. SCA-ØØ139-Ø6-A	SHEET 6 OF 27

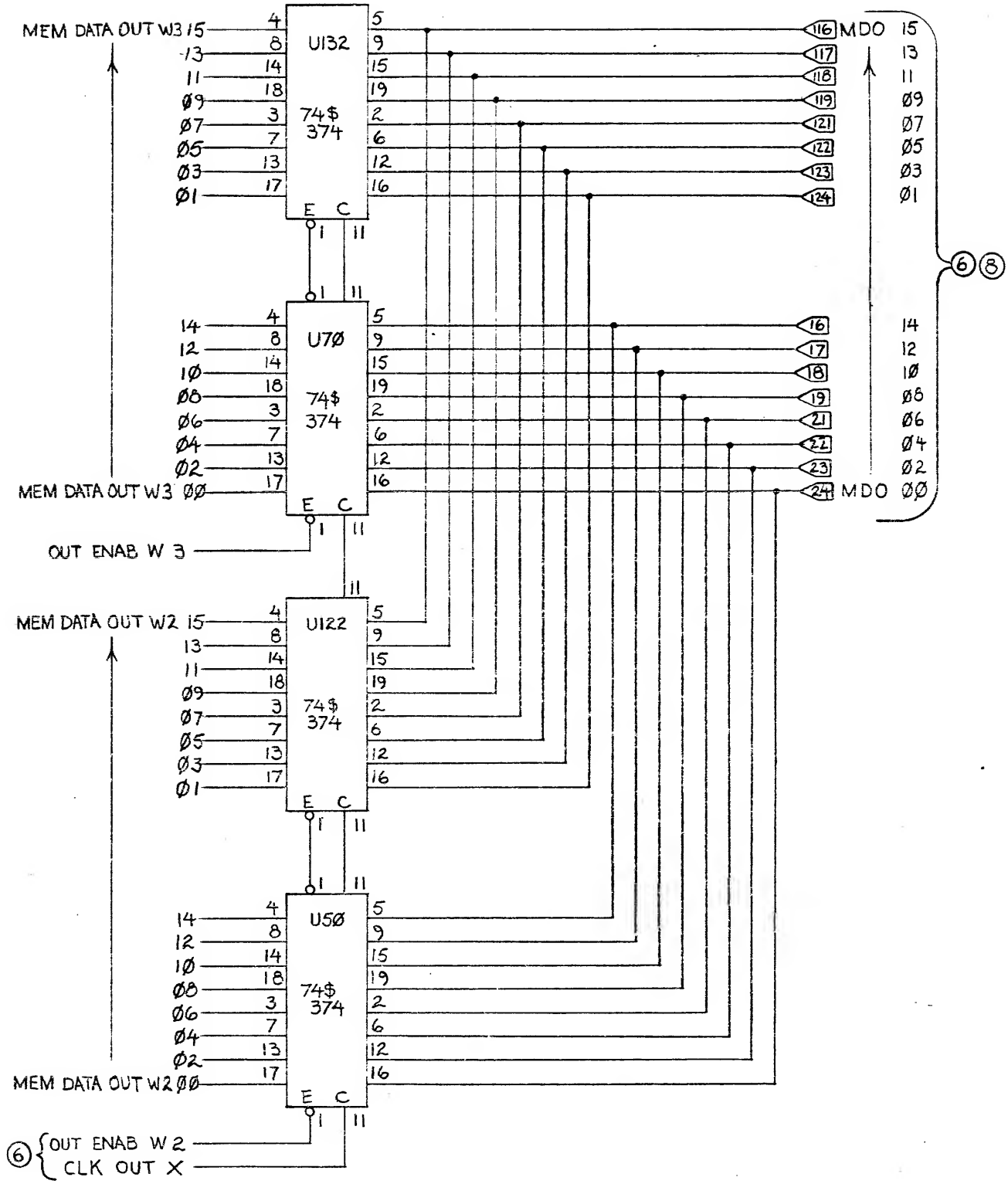

Three Rivers Computer		
TITLE DATA OUTPUT	PROJECT PERQ - MEM - D	
DRAWN BY / CHECKED BY	ECA-ØØ138-Ø7-A	PAGE 7 of 27

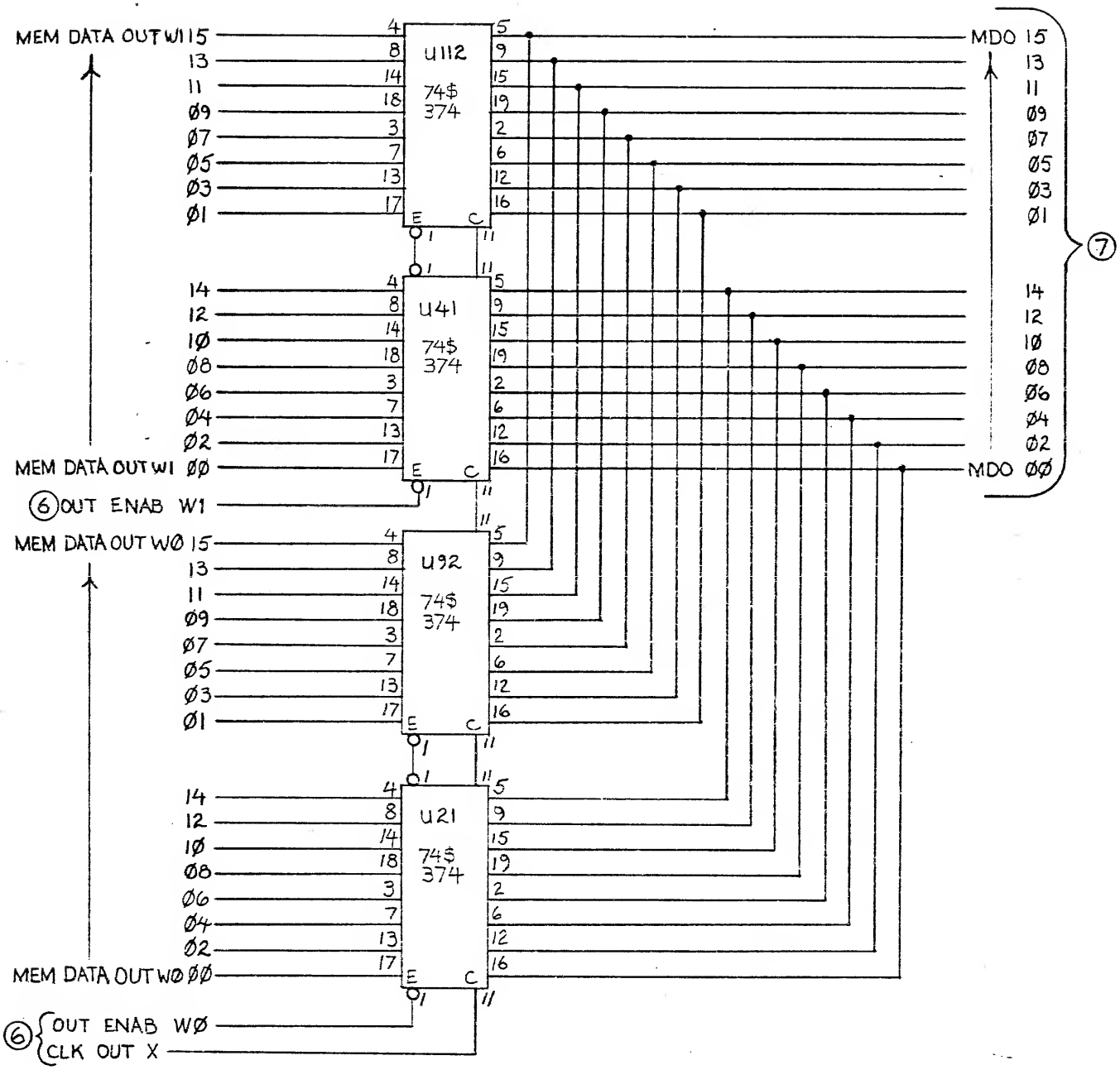

Three Rivers Computer		
TITLE DATA OUTPUT	PROJECT FERQ-MEM-D	
DRAWN BY [illegible] / CHECKED BY	DRAWING NO SCA-00138-08-A	PAGE 8 OF 27

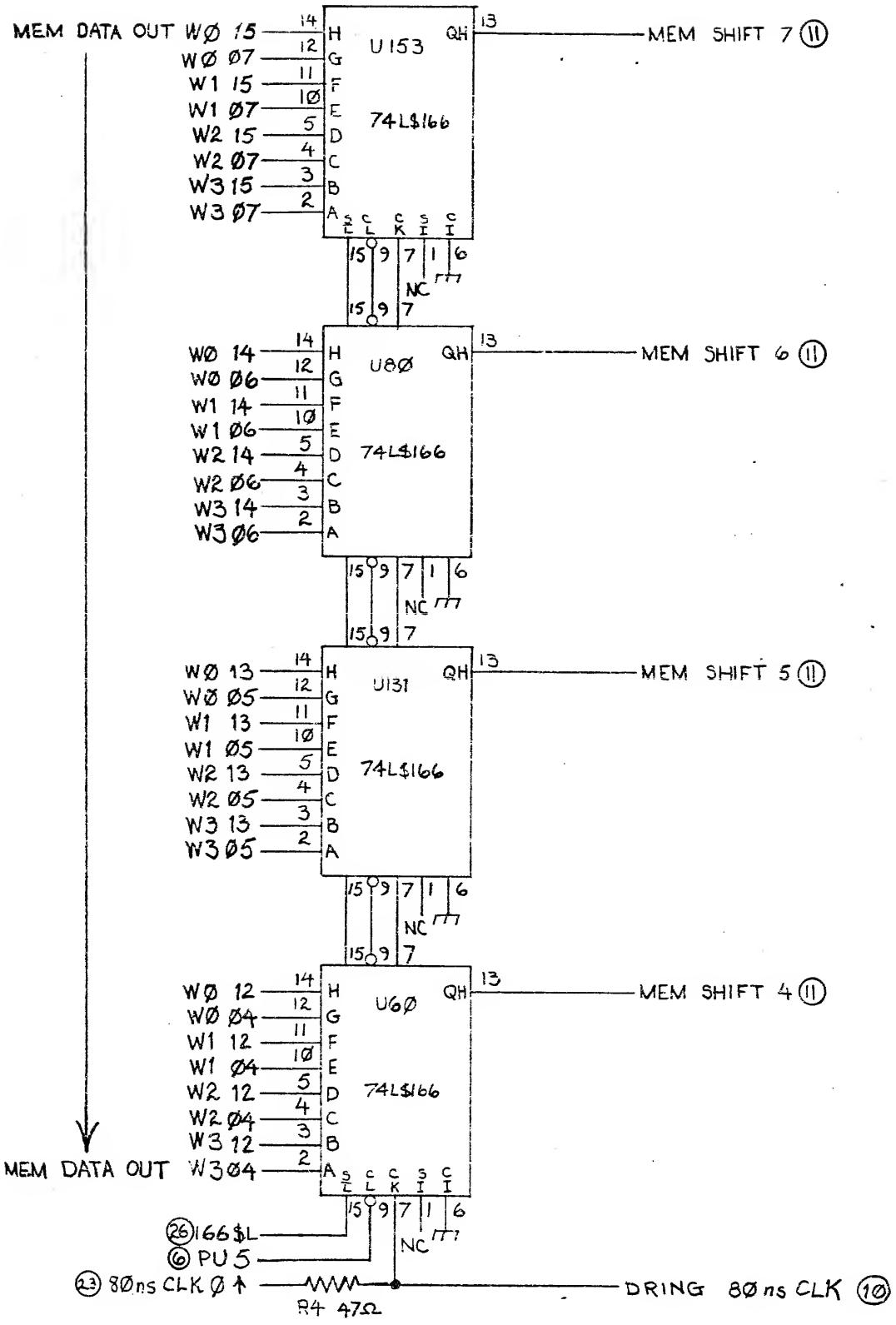

Three Rivers Computer	
TITLE MEMORY SHIFTER	PROJECT PERG-MEM
DRAWN BY / CHECKED BY	DRAWING NO. SCA-30138-03-A PAGE 9 OF 27

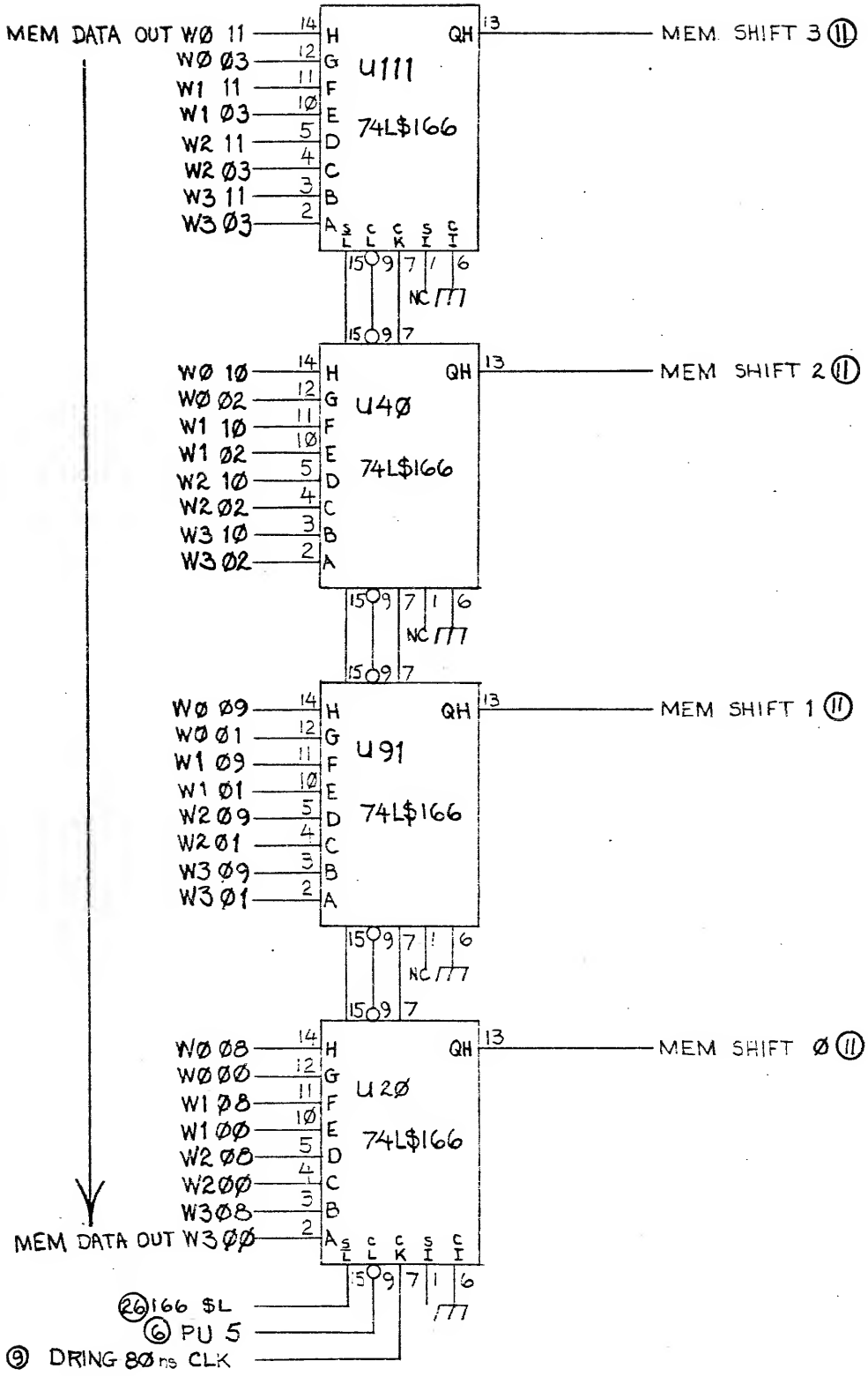

Three Rivers Computer	
TITLE: [illegible]	PROJECT: [illegible]-MEM-D
DRAWN BY: [illegible] CHECKED BY:	DRAWING NO. SCA-ØØ138-1Ø-A PAGE 1Ø OF 27

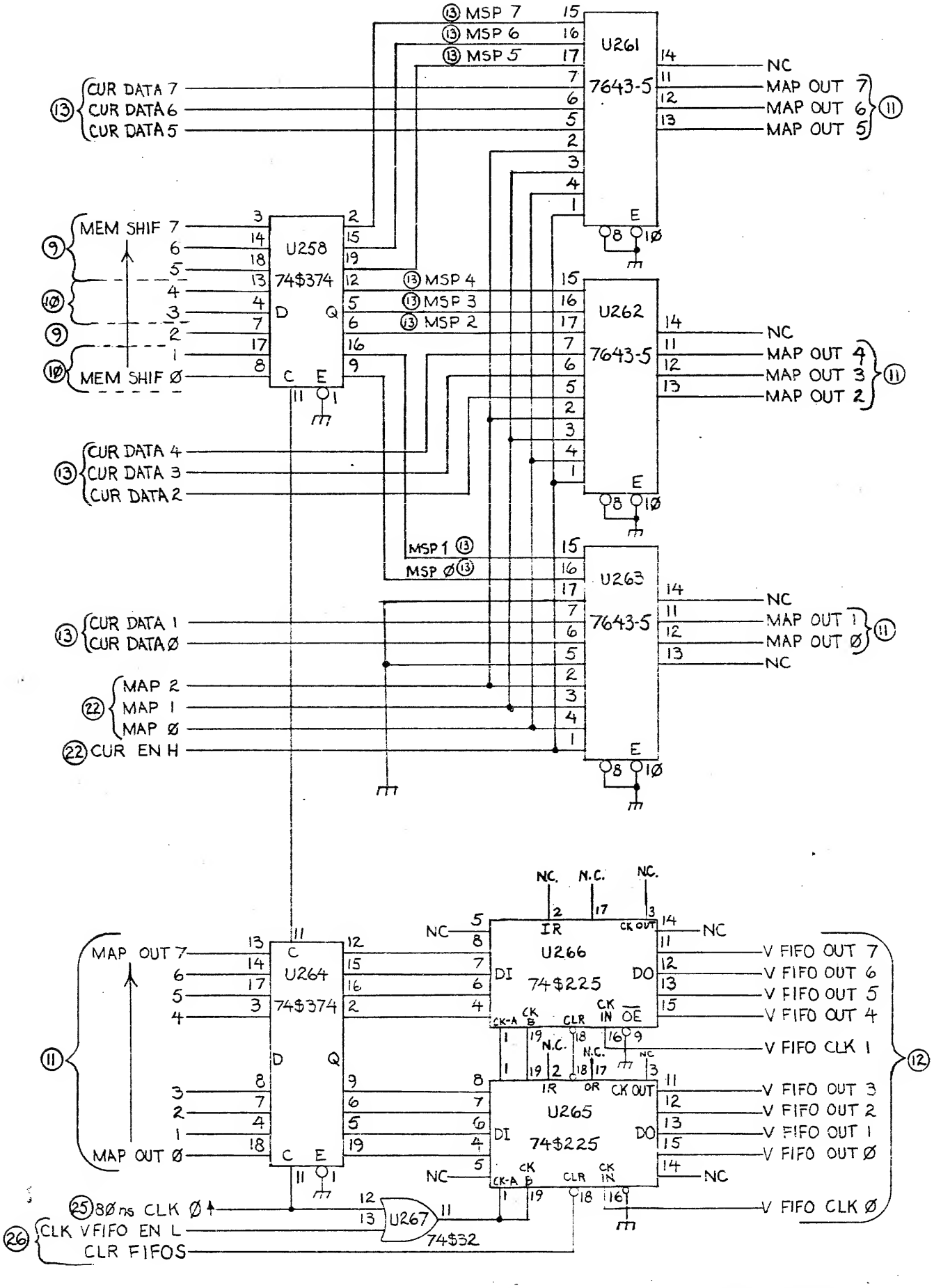

Three Rivers Computer

SCA-E0133-11-A

11 of 27

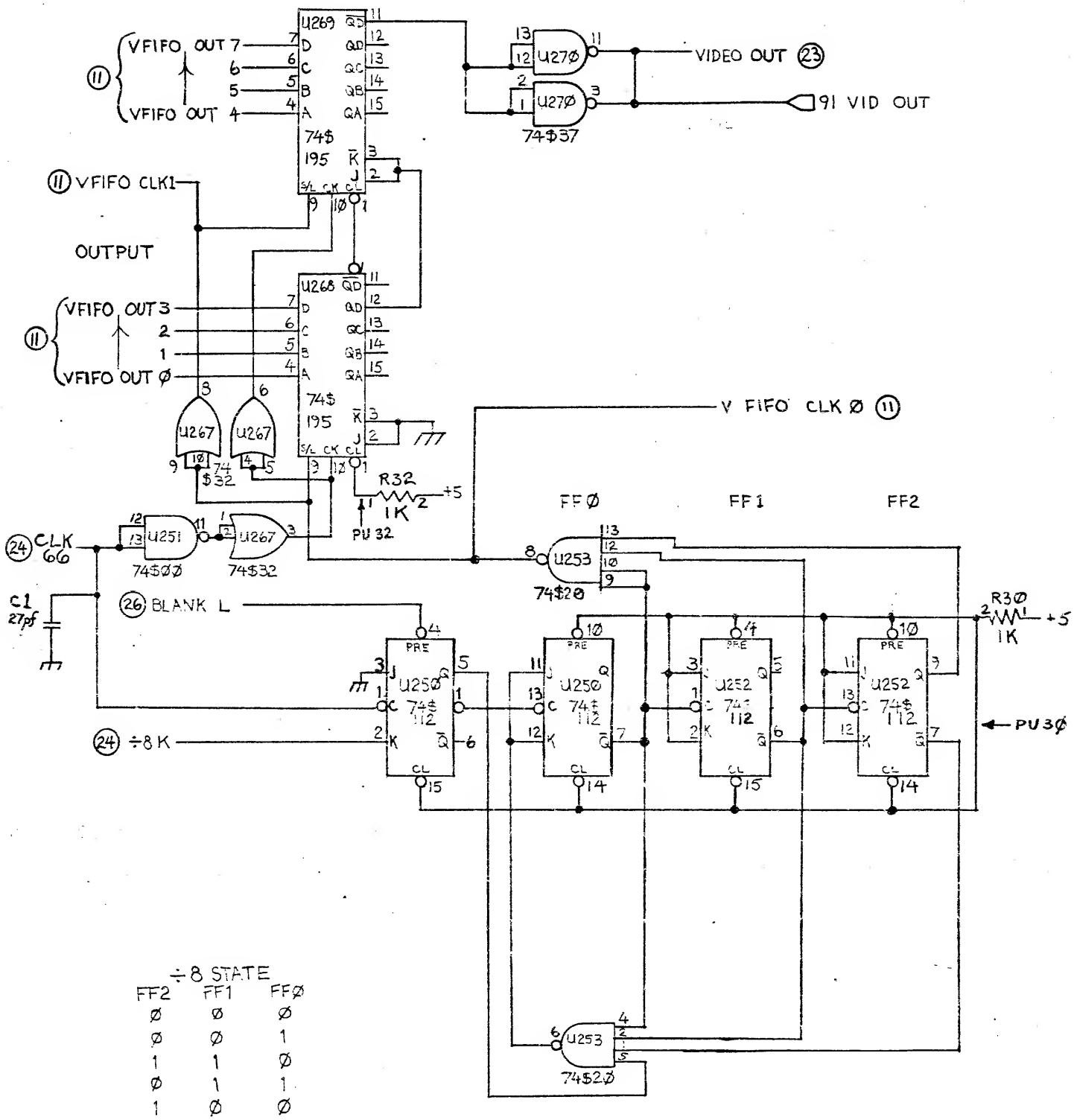

÷8 STATE

FF2	FF1	FFØ
Ø	Ø	Ø
Ø	Ø	1
1	1	Ø
Ø	1	1
1	Ø	Ø
1	Ø	1
Ø	1	Ø
1	1	1

Three Rivers Computer

TITLE VIDEO OUTPUT | PROJECT PERQ-MEM

DRAWN BY | CHECKED BY | DRAWING NO. SCA-ØØ138-12-A | PAGE 12 of 27

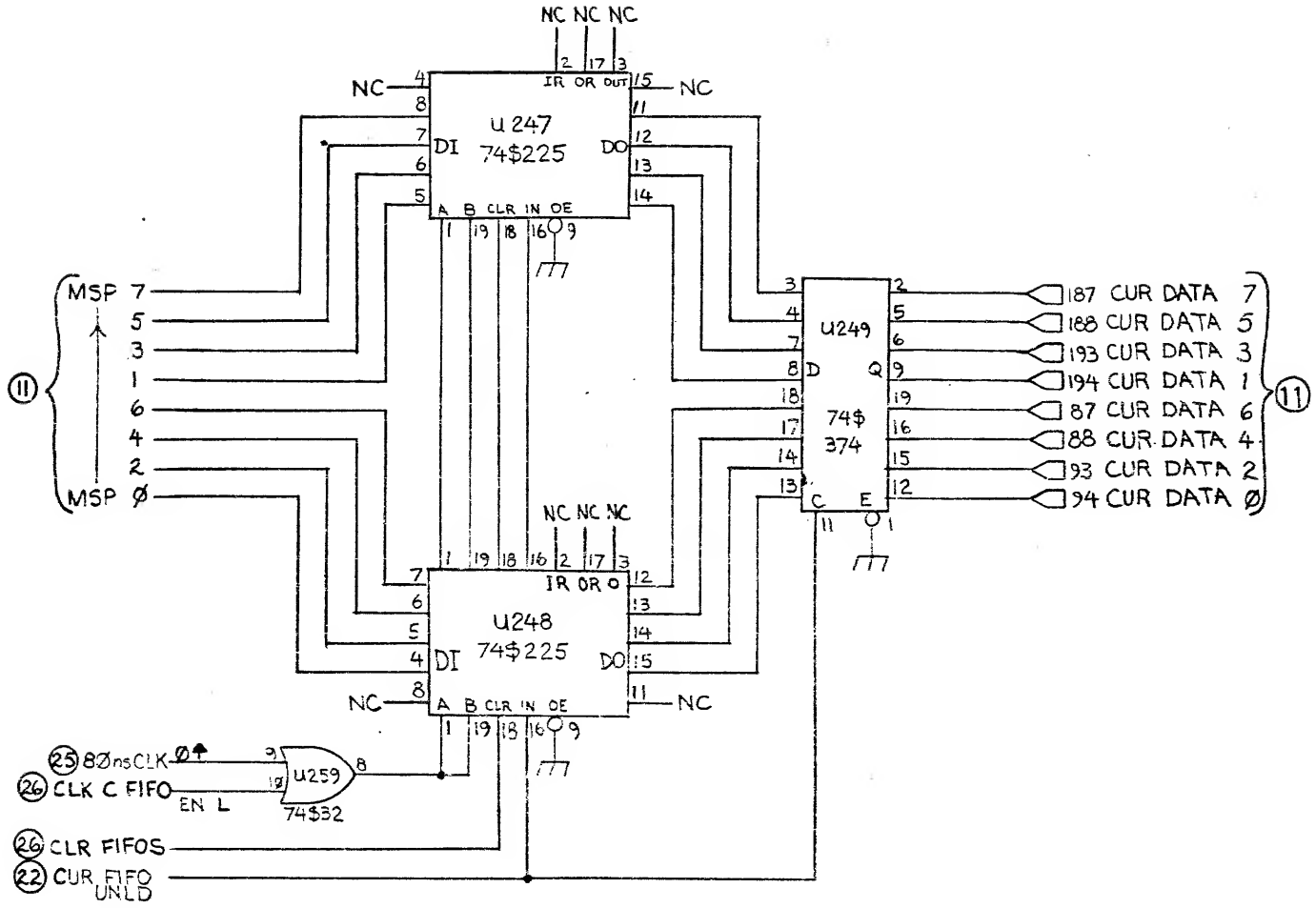

Three Rivers Computer		
TITLE VIDEO OUTPUT	PROJECT PERQ-VIEW-	
DRAWN BY	DRAWING NO. SCA-00139-13-A	PAGE 13 - 27

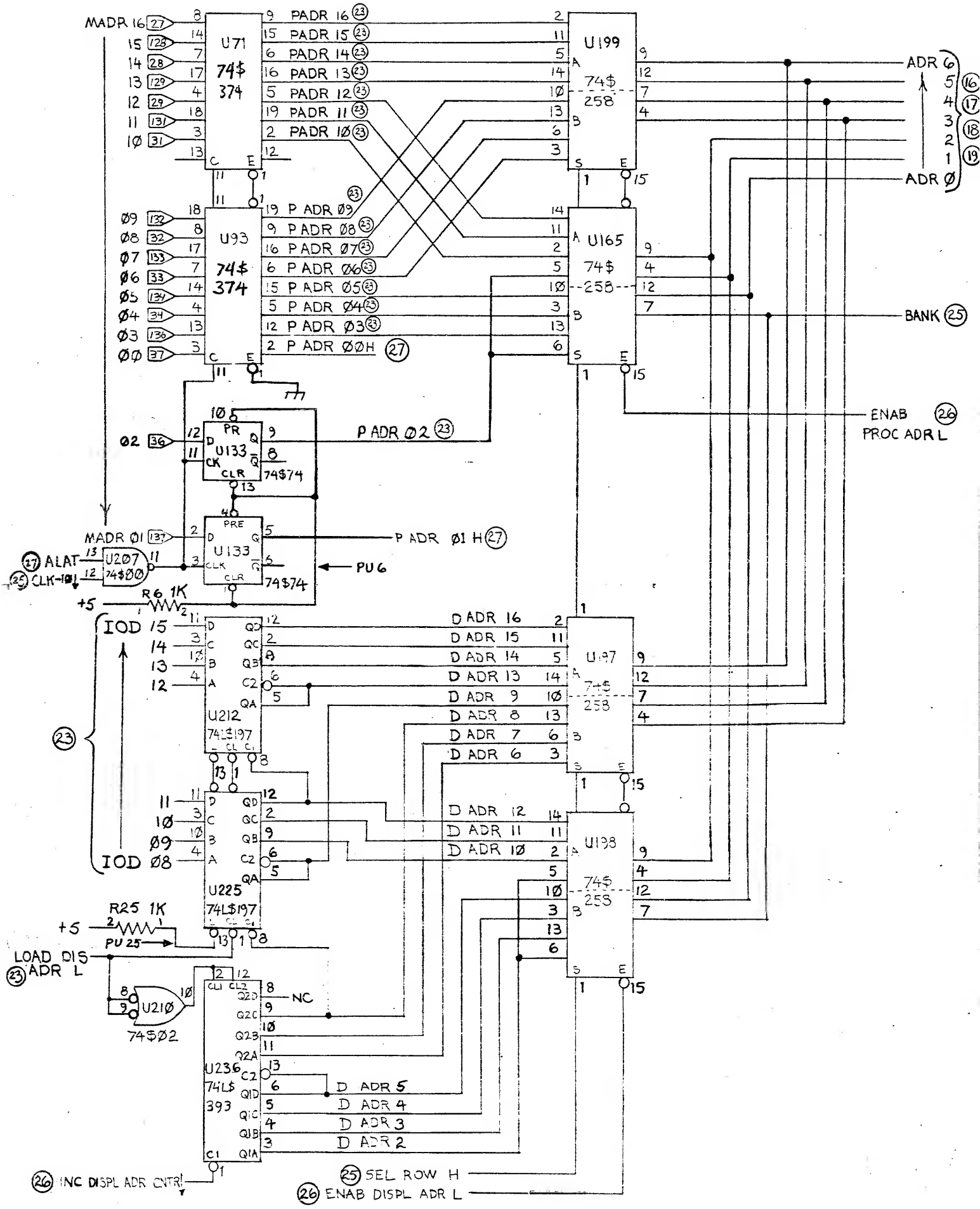

Three Rivers Computer

MEM ADR SEL

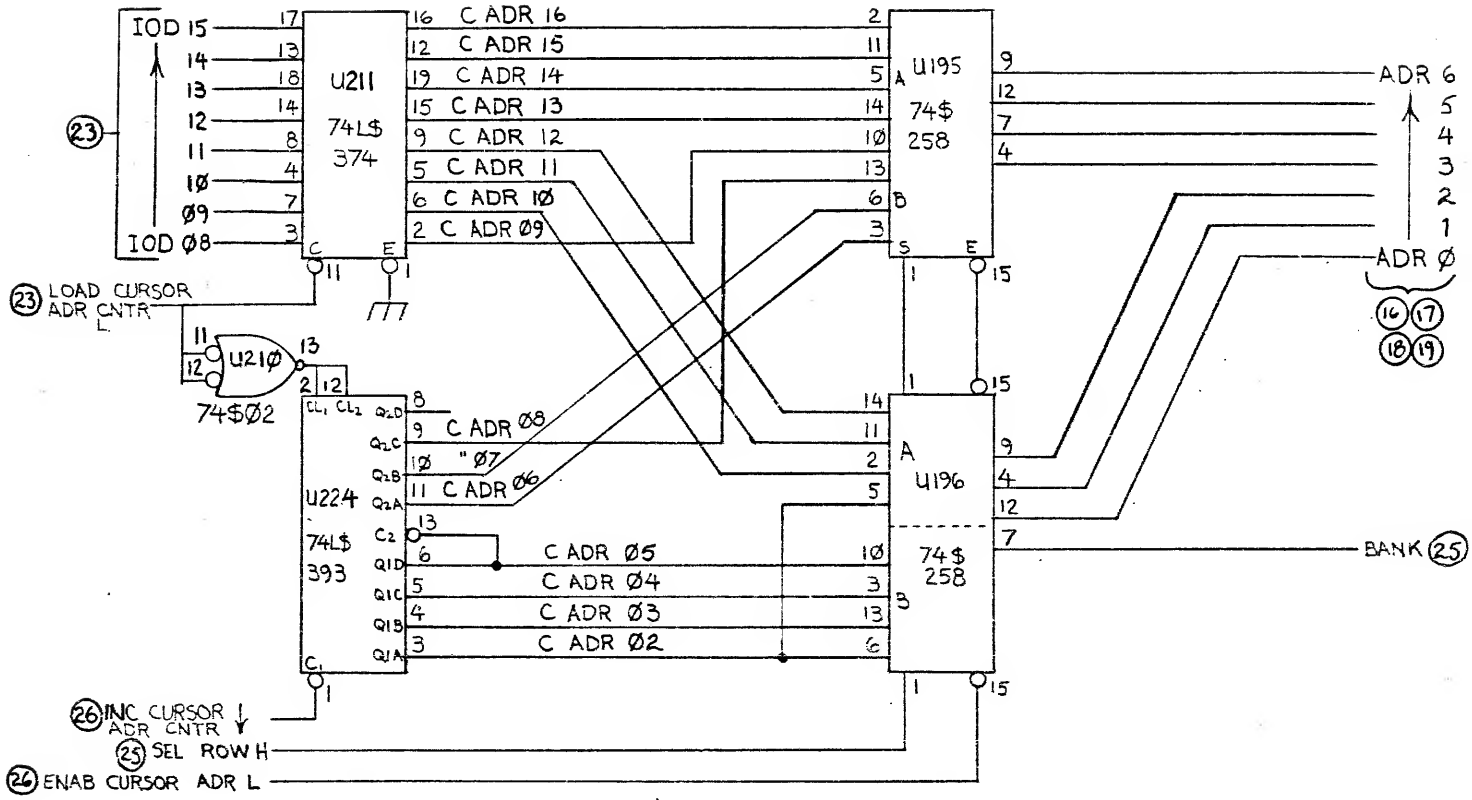
IOD 15
14
13
12
11
10
09
IOD 08
U211
74L$
374
C ADR 16
C ADR 15
C ADR 14
C ADR 13
C ADR 12
C ADR 11
C ADR 10
C ADR 09
U195
74$
258
ADR 6
5
4
3
2
1
ADR 0
LOAD CURSOR ADR CNTR L
U210
74$02
U224
74L$
393
C ADR 08
" 07
C ADR 06
C ADR 05
C ADR 04
C ADR 03
C ADR 02
U196
74$
258
BANK
INC CURSOR ADR CNTR
SEL ROW H
ENAB CURSOR ADR L

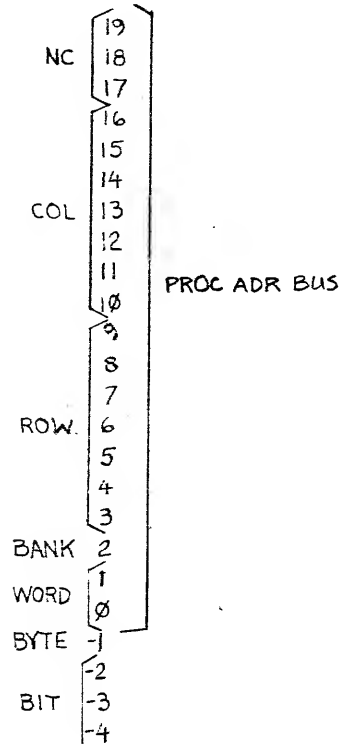
NC
COL
ROW
BANK
WORD
BYTE
BIT
PROC ADR BUS

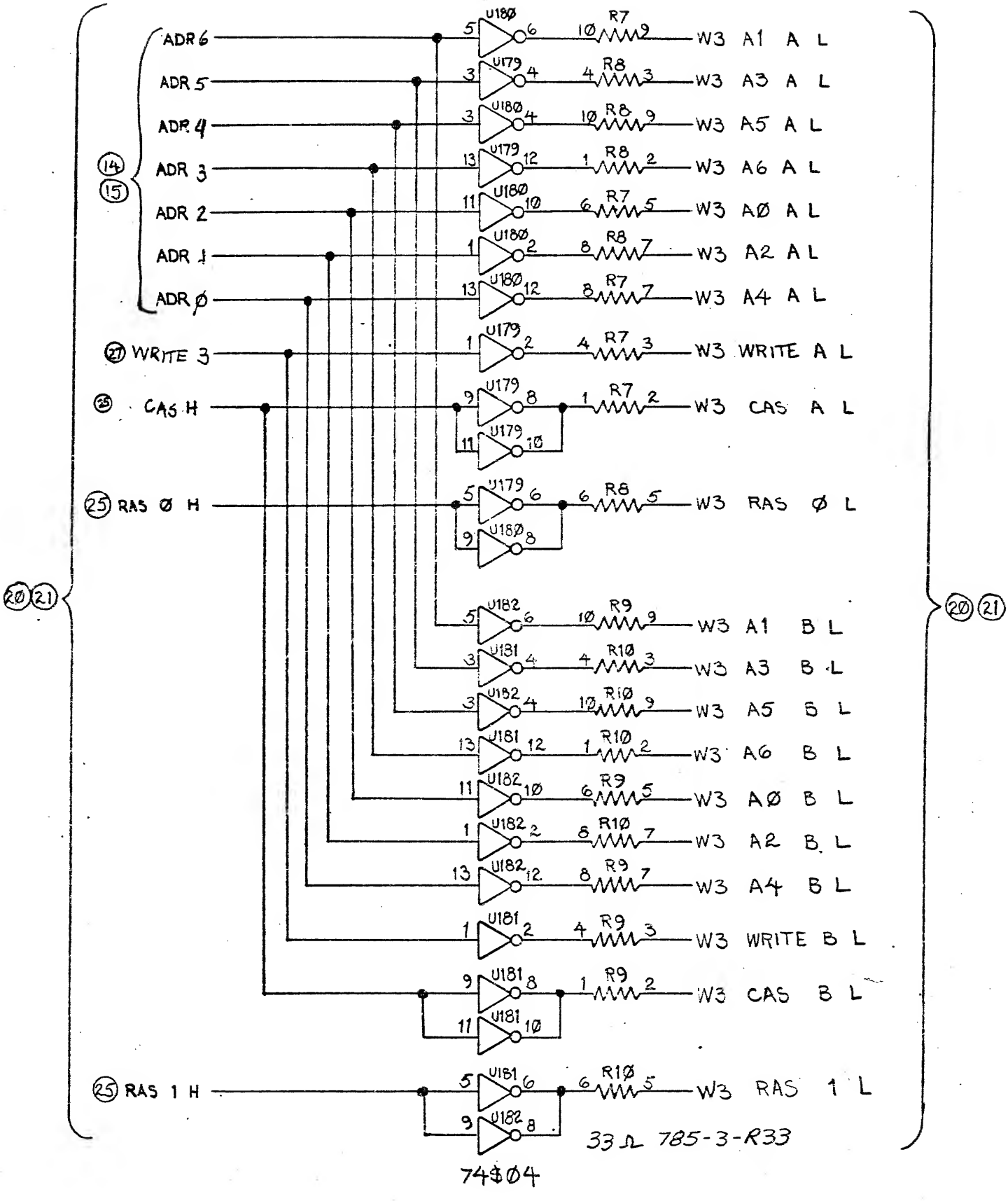

Three Rivers Computer	
MEM DRIVERS 3	PERQ - MEM - D
SCA-Ø1139-16-A	16 - 27

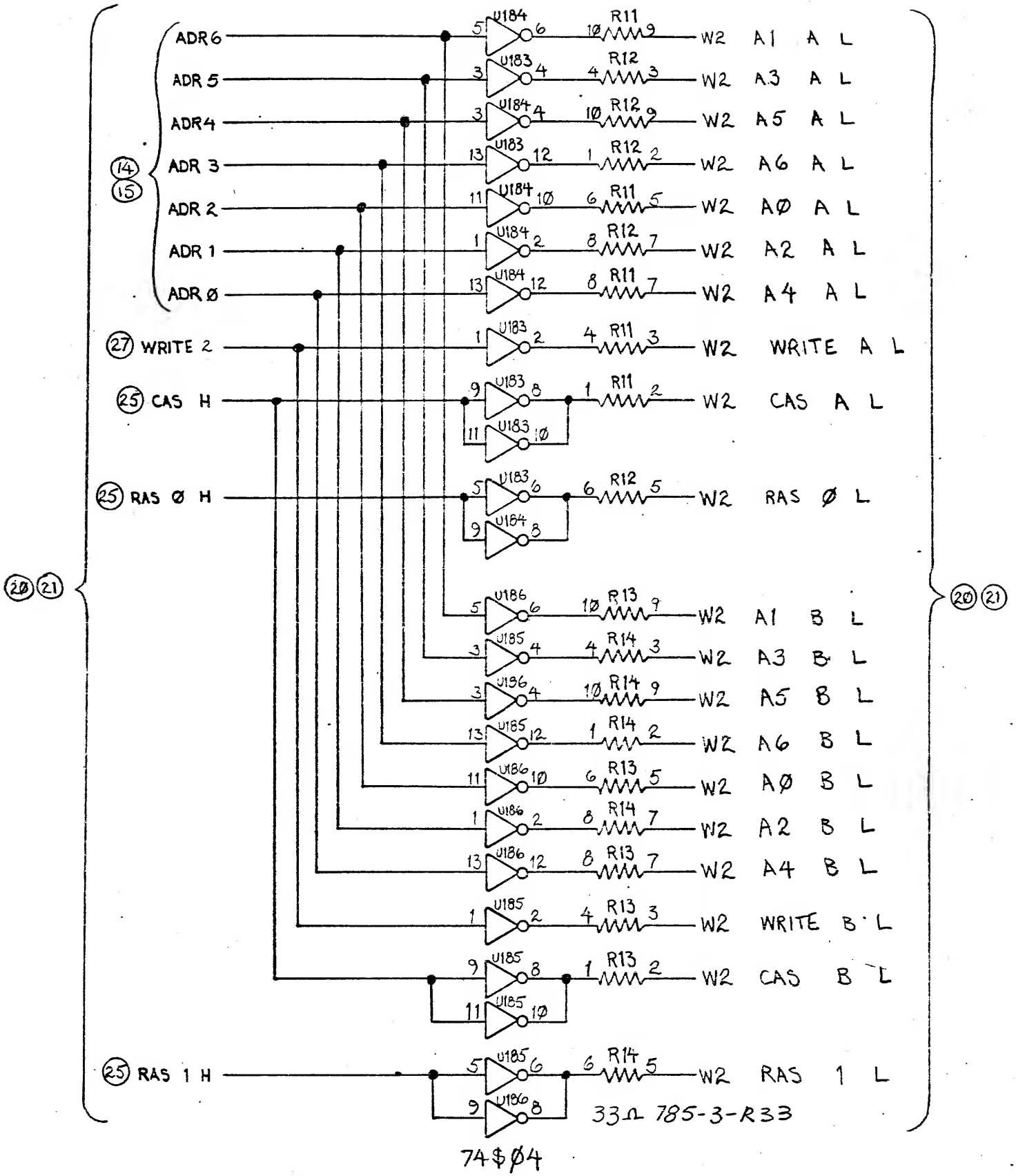

Three Rivers Computer	
MEM DRIVERS 2	PERQ-MEM-D
SB 4/79	SC2-ØØ138-17-A	17 of 27

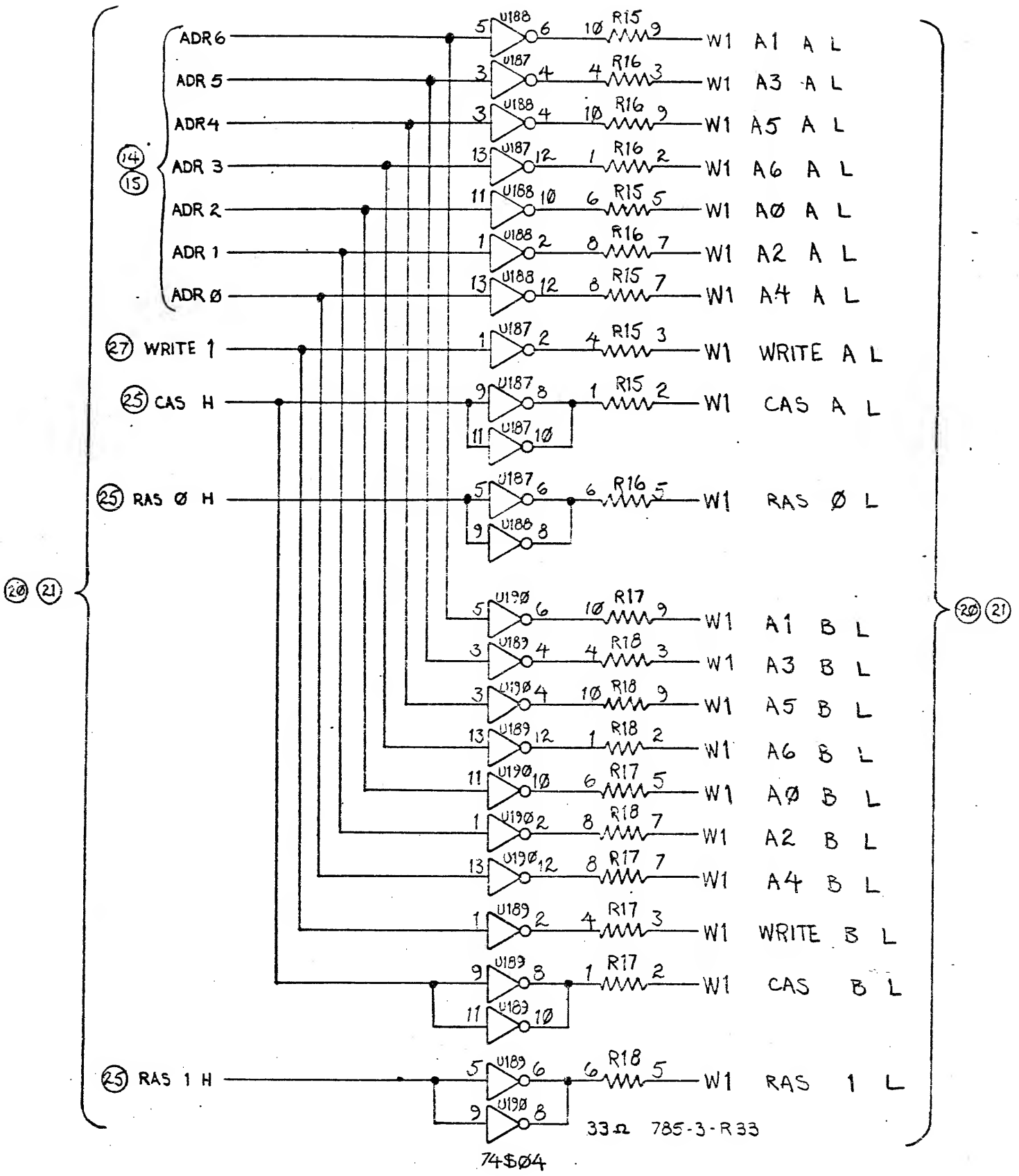

Three Rivers Computer	
VIEW DRIVERS Ø	PERQ-KE 1-D
	SCA-44138-18-A

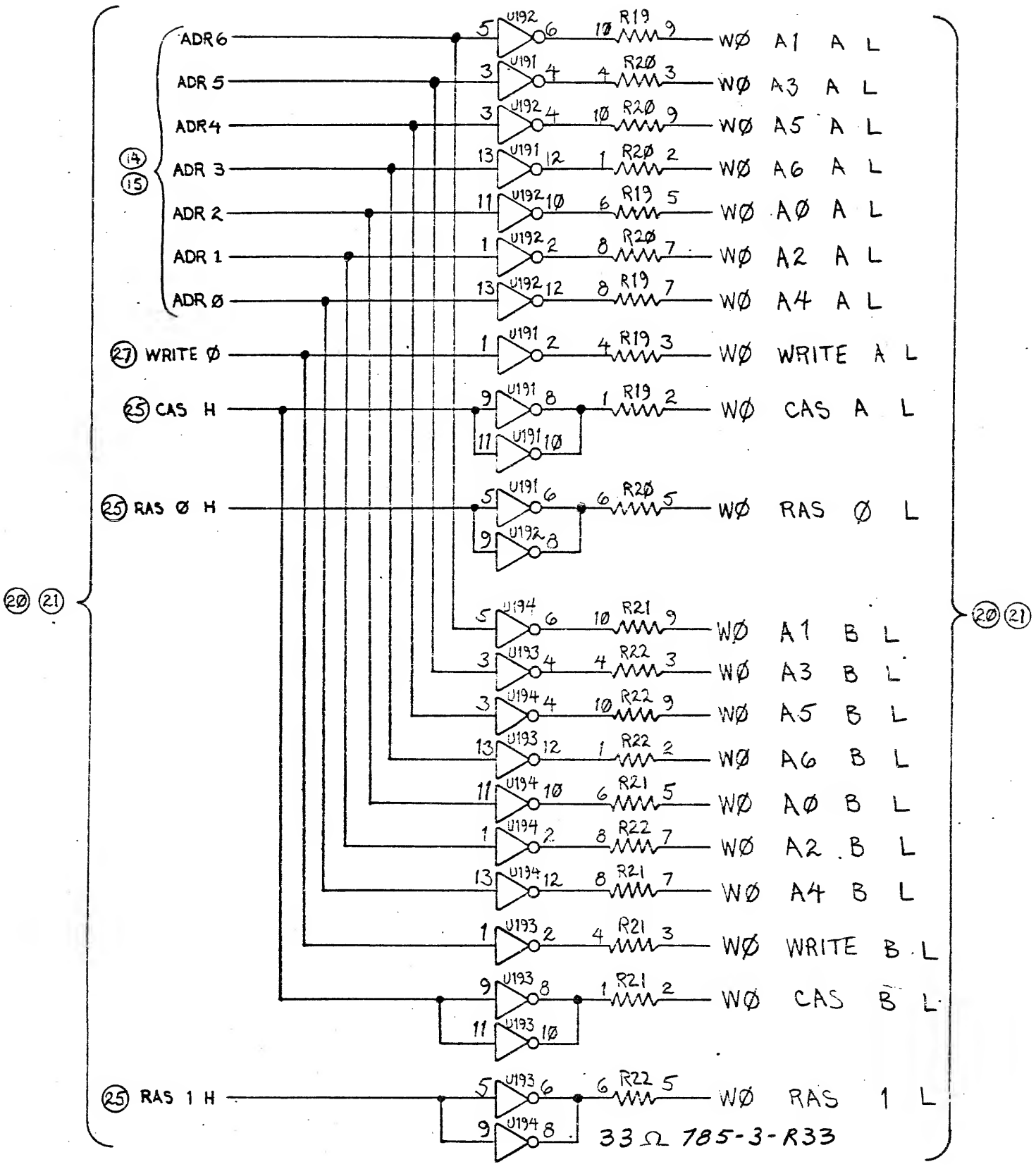

Three Rivers Computer	
MEM DRIVERS	PERQ-MEM
	19-27

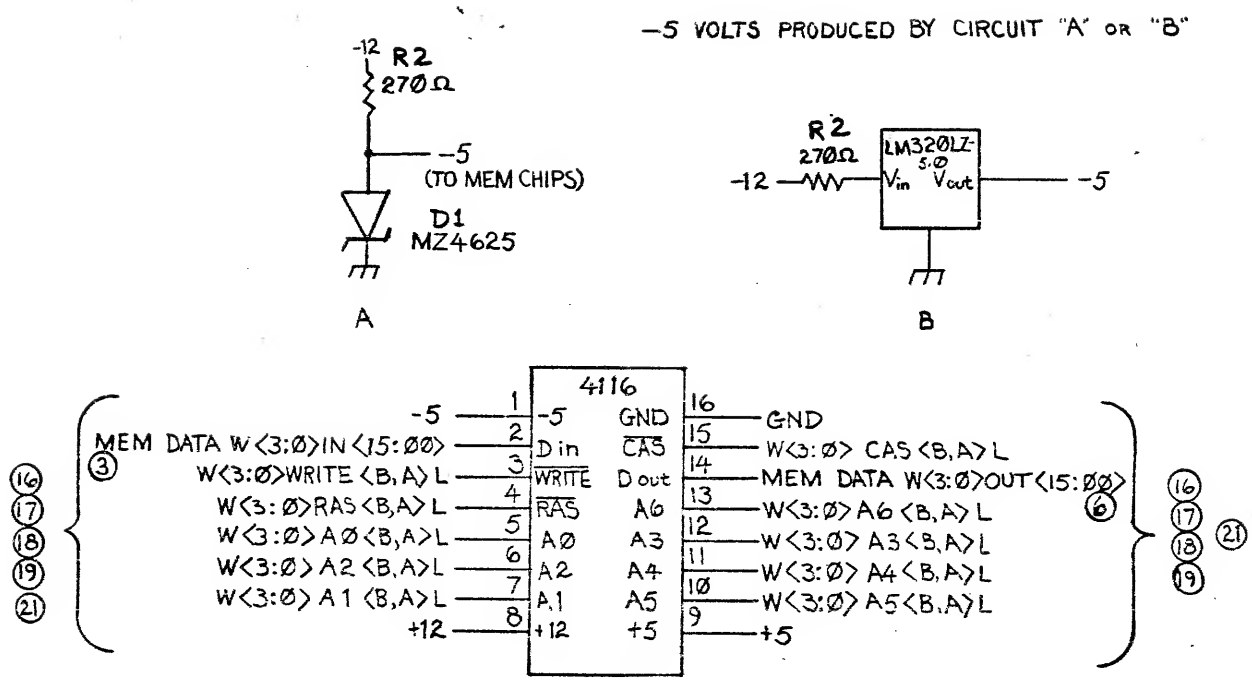

NOTE:
SEE PAGE 21 FOR RAM ARRAY

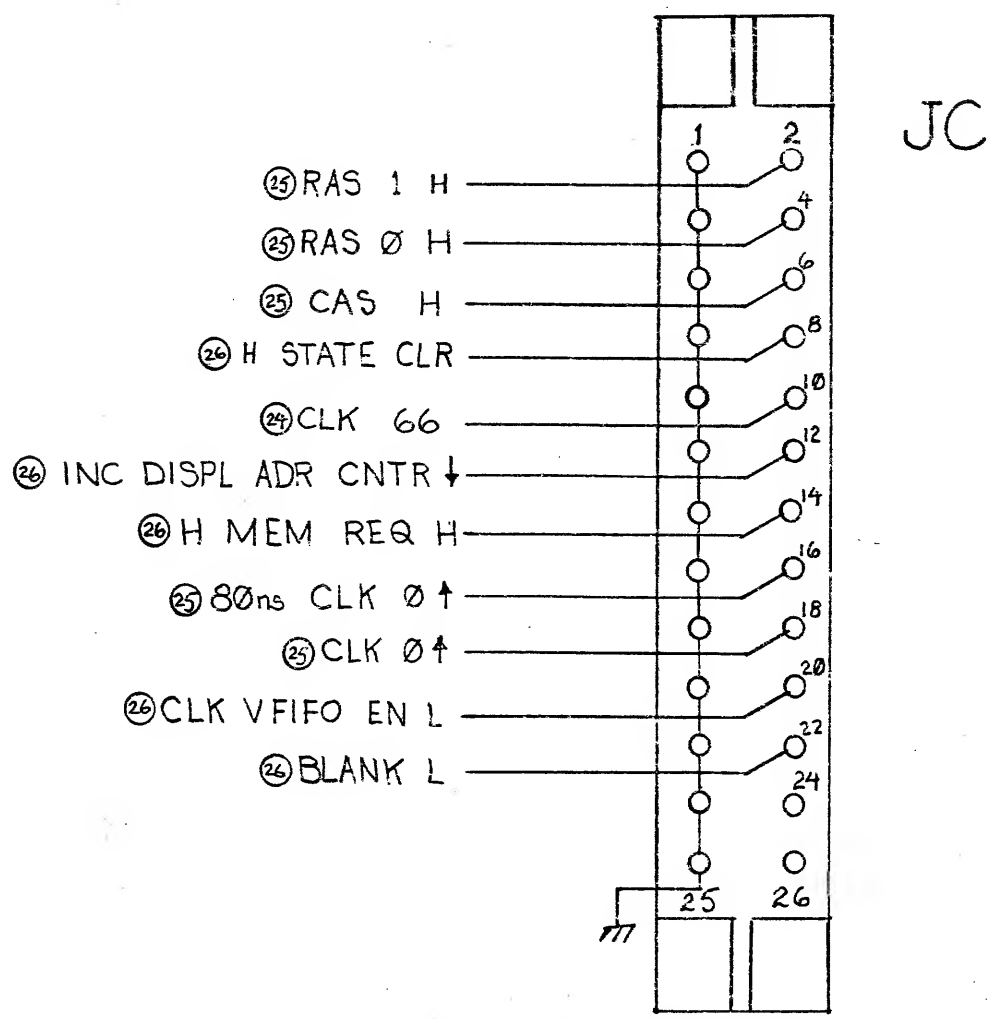

Three Rivers Computer	
TITLE: TYPE-MEM-JC	PROJECT: PERQ-MEM-D
DRAWN BY / CHECKED BY	DRAWING NO. SCA-ØØ158-2Ø-A — PAGE 20 of 27

RAS Ø = BANK Ø BANK = M[2]
RAS 1 = BANK 1

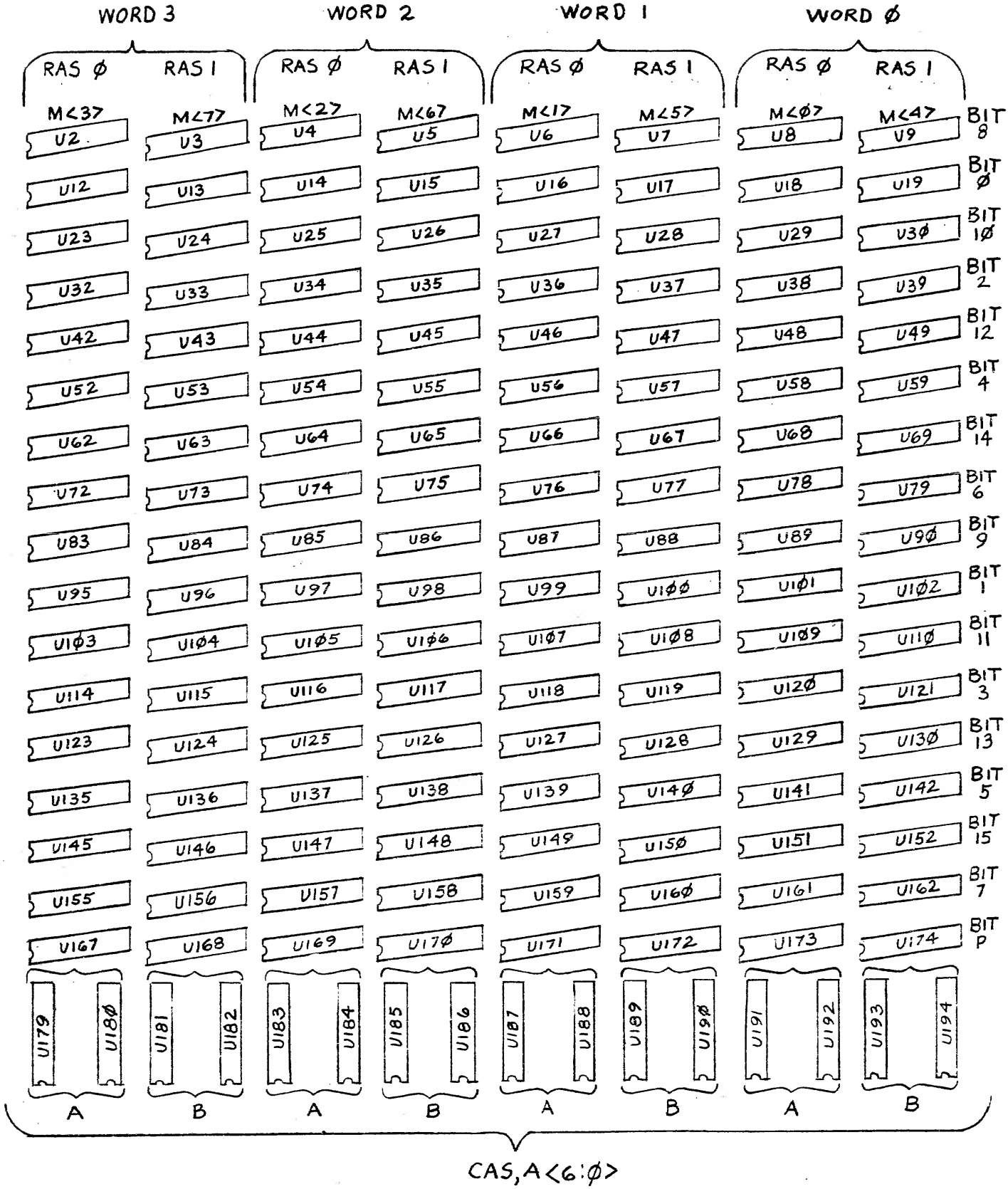

WORD 3		WORD 2		WORD 1		WORD Ø		
RAS Ø	RAS 1	RAS Ø	RAS 1	RAS Ø	RAS 1	RAS Ø	RAS 1	
M<3>	M<7>	M<2>	M<6>	M<1>	M<5>	M<Ø>	M<4>	
U2	U3	U4	U5	U6	U7	U8	U9	BIT 8
U12	U13	U14	U15	U16	U17	U18	U19	BIT Ø
U23	U24	U25	U26	U27	U28	U29	U3Ø	BIT 1Ø
U32	U33	U34	U35	U36	U37	U38	U39	BIT 2
U42	U43	U44	U45	U46	U47	U48	U49	BIT 12
U52	U53	U54	U55	U56	U57	U58	U59	BIT 4
U62	U63	U64	U65	U66	U67	U68	U69	BIT 14
U72	U73	U74	U75	U76	U77	U78	U79	BIT 6
U83	U84	U85	U86	U87	U88	U89	U9Ø	BIT 9
U95	U96	U97	U98	U99	U1ØØ	U1Ø1	U1Ø2	BIT 1
U1Ø3	U1Ø4	U1Ø5	U1Ø6	U1Ø7	U1Ø8	U1Ø9	U11Ø	BIT 11
U114	U115	U116	U117	U118	U119	U12Ø	U121	BIT 3
U123	U124	U125	U126	U127	U128	U129	U13Ø	BIT 13
U135	U136	U137	U138	U139	U14Ø	U141	U142	BIT 5
U145	U146	U147	U148	U149	U15Ø	U151	U152	BIT 15
U155	U156	U157	U158	U159	U16Ø	U161	U162	BIT 7
U167	U168	U169	U17Ø	U171	U172	U173	U174	BIT P
U179 U18Ø	U181 U182	U183 U184	U185 U186	U187 U188	U189 U19Ø	U191 U192	U193 U194	
A	B	A	B	A	B	A	B	

CAS, A<6:Ø>

Three Rivers Computer
REM ARRAY
DIV 1129
SCA-Ø3188-21-A
21 - 27

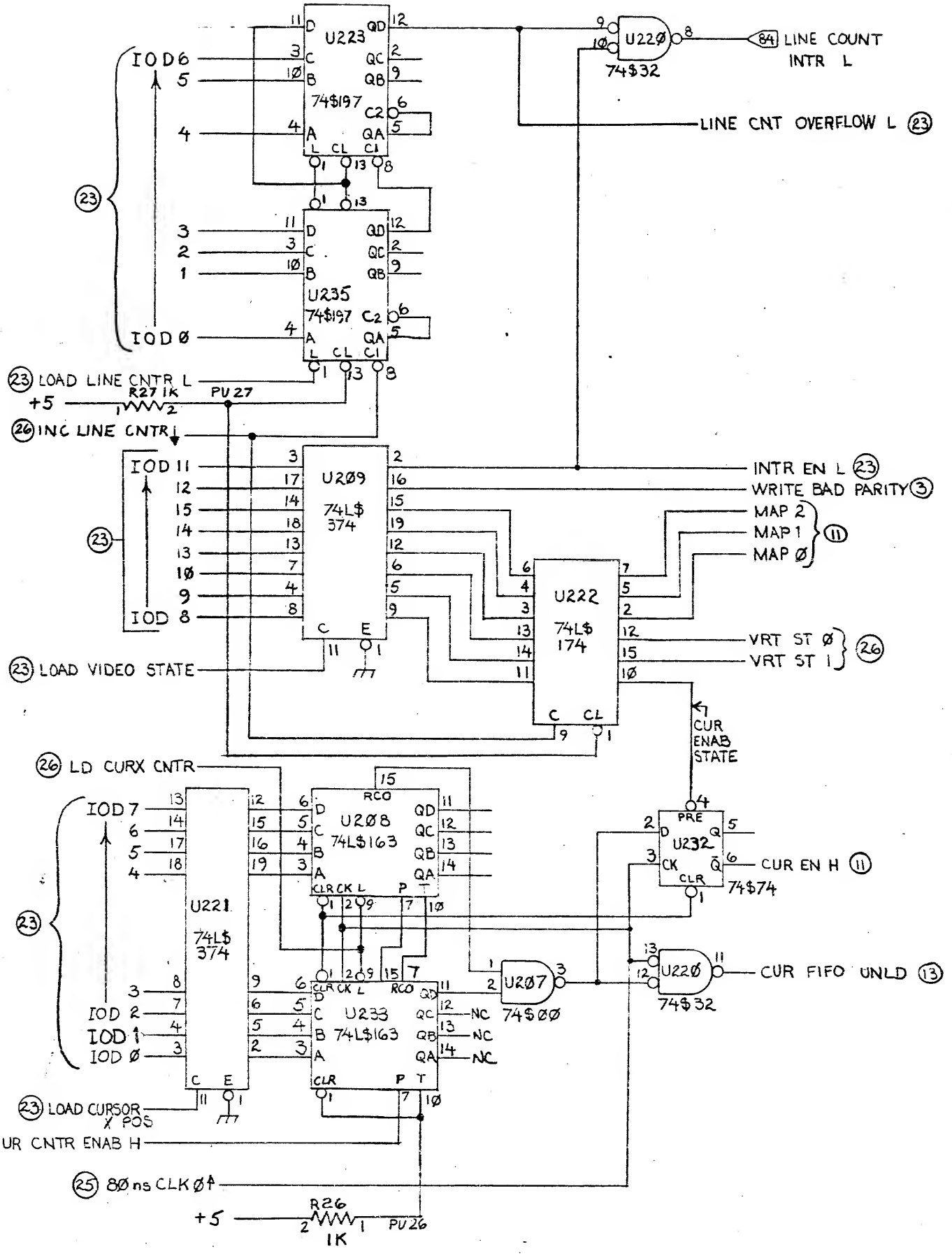

Three Rivers Computer	
I/O REGISTERS	PERIPHERAL
	SCA-00138-22-A 22 of 27

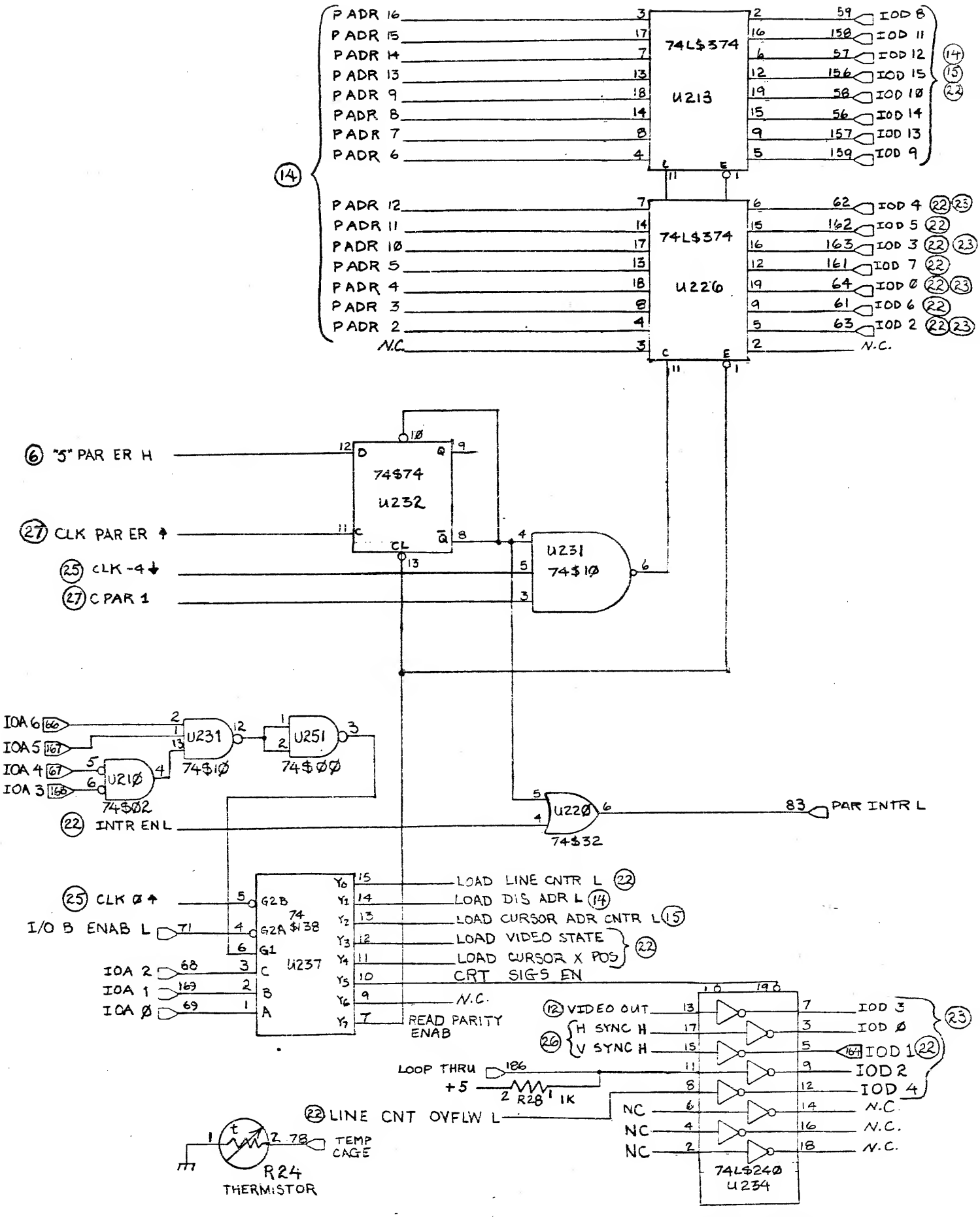

Three Rivers Computer

I/O REGISTERS | PERQ-MEM-

RAP 11/79 | 558-00138-23-4 | -23-27

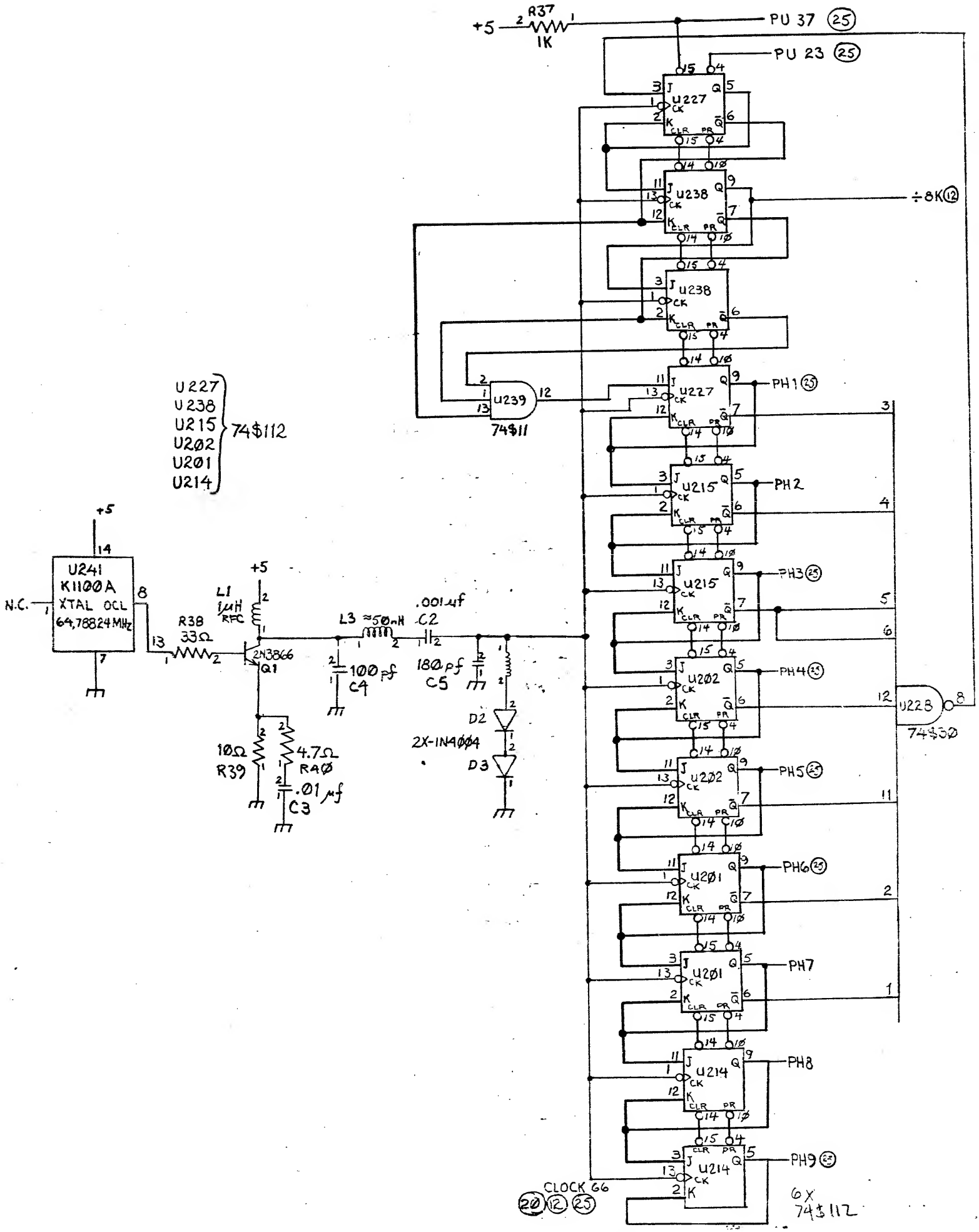
+5
R37
1K
PU 37 (25)
PU 23 (25)
U227
U238
÷8K (12)
U239
74$11
U227
U238
U215
U202
U201
U214
74$112
PH1 (25)
PH2
PH3 (25)
PH4 (25)
PH5 (25)
PH6 (25)
PH7
PH8
PH9 (25)
U228
74$30
U241
K1100A
XTAL OCL
64,78824 MHz
N.C.
R38
33Ω
L1
1μH
RFC
2N3866
Q1
L3 ≈50nH
.001μf
C2
100 pf
C4
180 pf
C5
D2
2X-IN4004
D3
10Ω
R39
4.7Ω
R40
.01 μf
C3
CLOCK 66
(20) (12) (25)
6X
74$112
Three Rivers Computer
CLOCK GEN
PEPQ

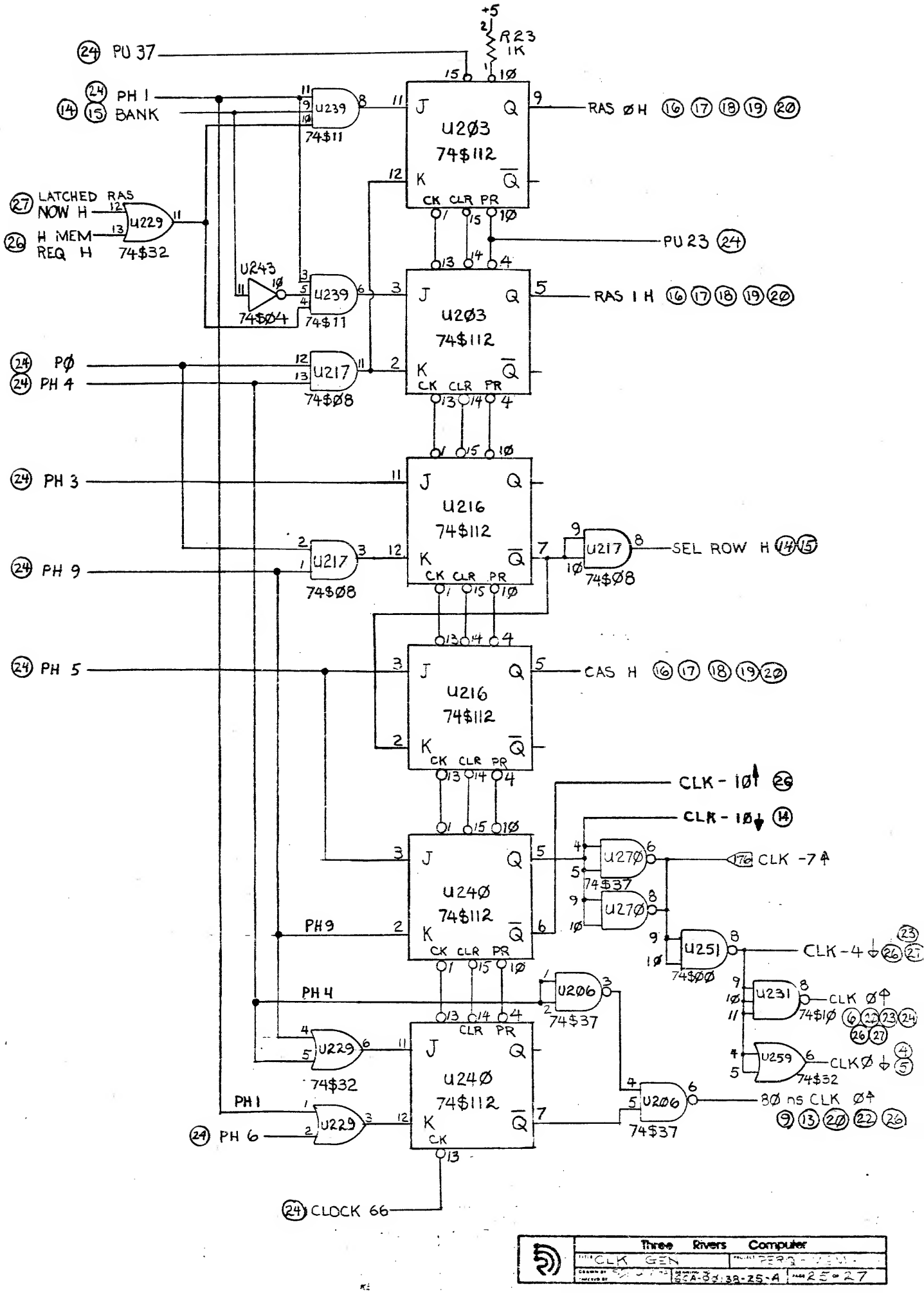

Three Rivers Computer	
CLK GEN	PERQ - MEM
DRAWN BY	DRAWING NO. SCA-ØØ-38-25-A
CHECKED BY	PAGE 25 of 27

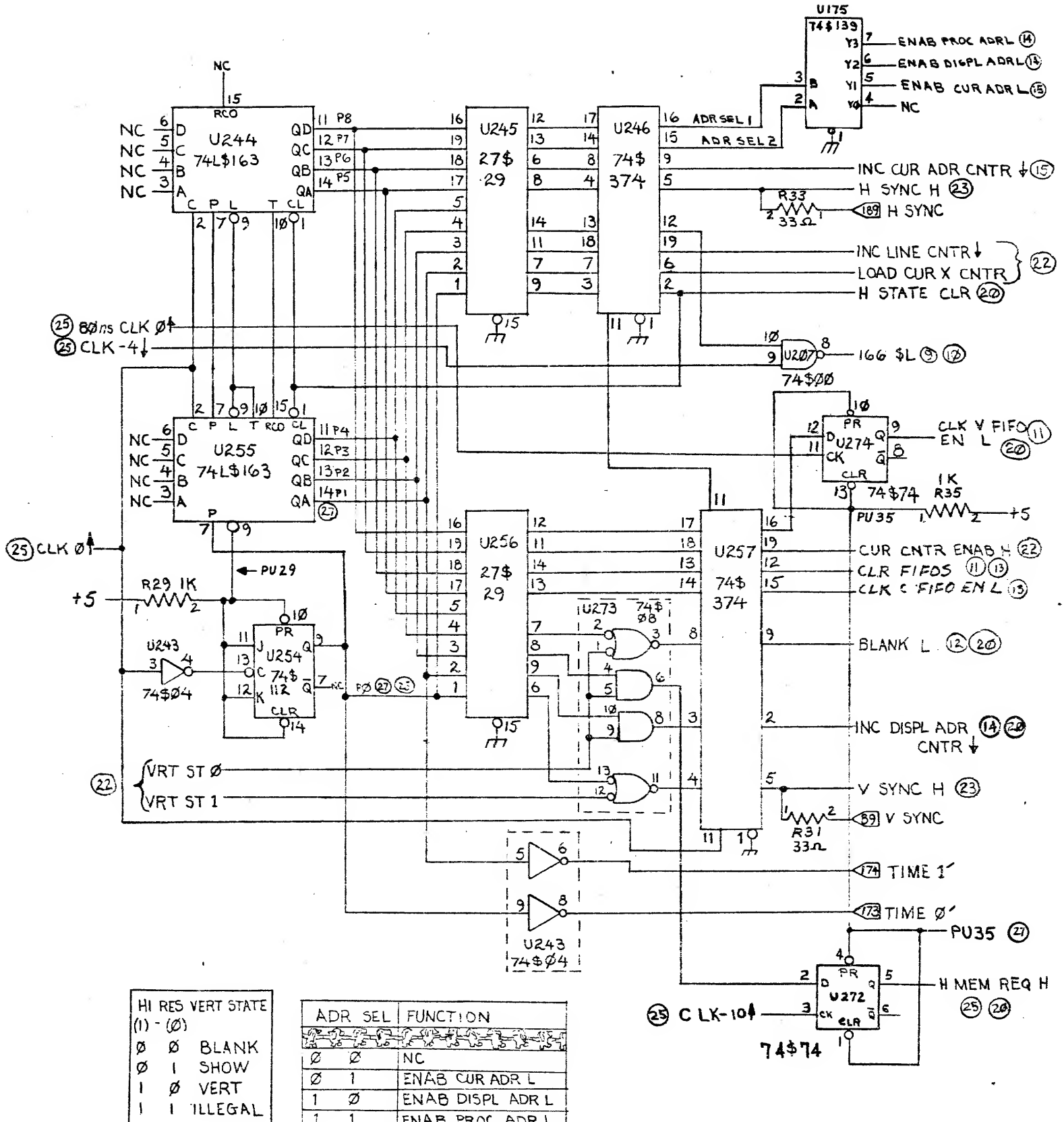

HI RES VERT STATE (1) - (Ø)	
Ø	Ø BLANK
Ø	1 SHOW
1	Ø VERT
1	1 ILLEGAL

ADR SEL		FUNCTION
Ø	Ø	NC
Ø	1	ENAB CUR ADR L
1	Ø	ENAB DISPL ADR L
1	1	ENAB PROC ADR L

Three Rivers Computer
HORIZONTAL STATE
SCA-ØØ128-26-A

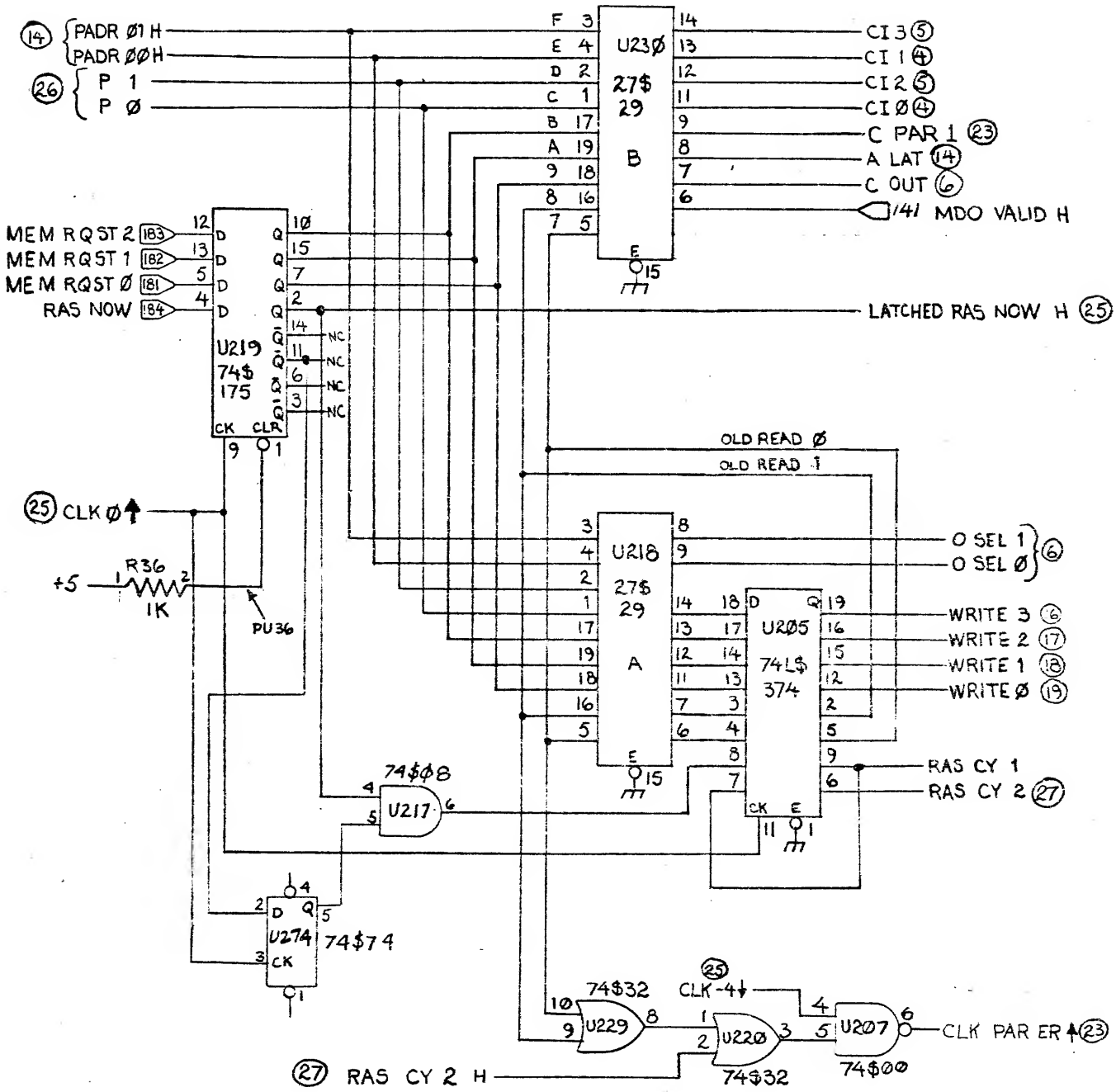

Three Rivers Computer		
MEM CNTL		MEM
	ECA-ØØ138-27-A	27 of 27